PLS-CADD Drawing

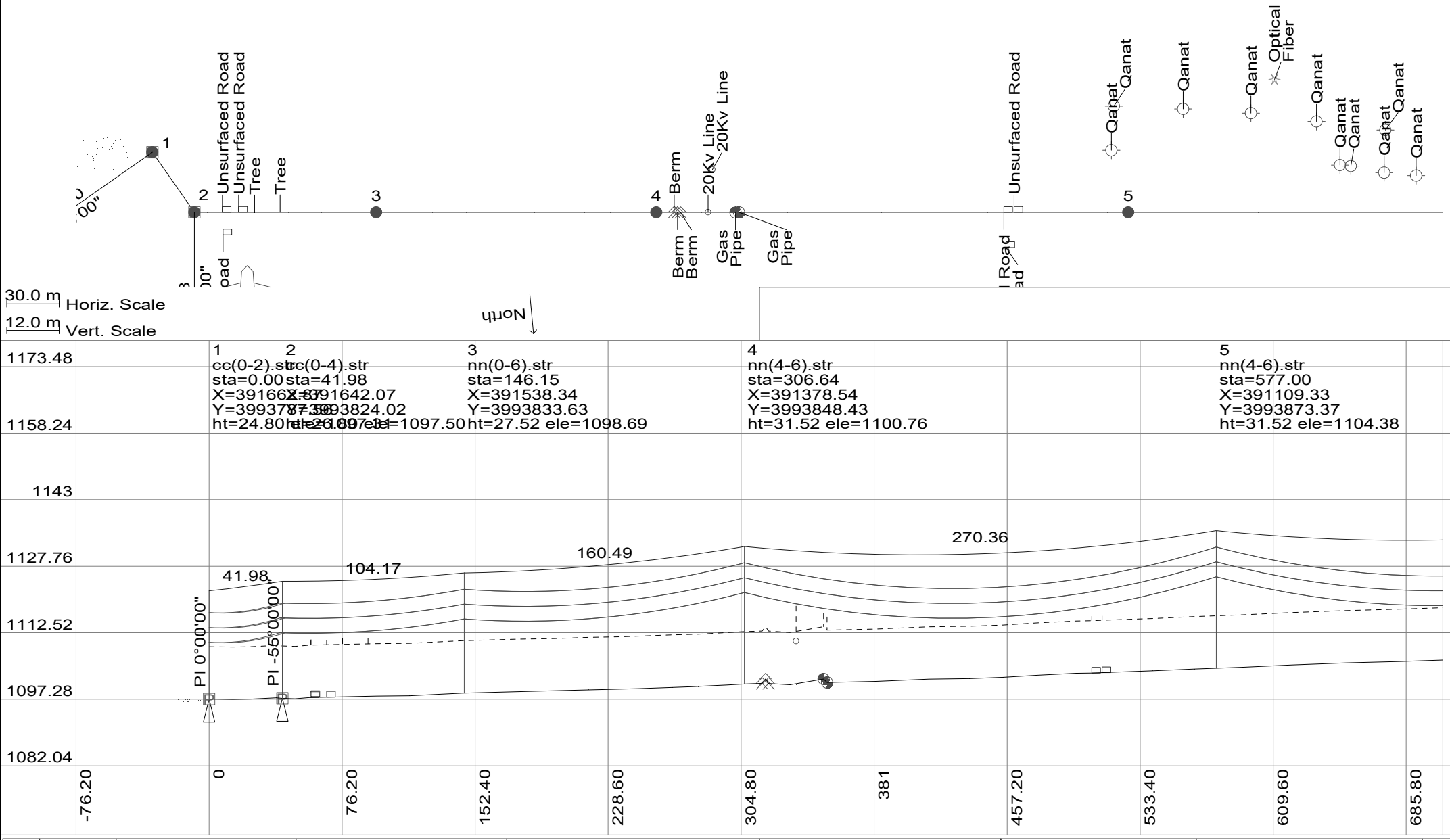

REV.	DATE	DESCRIPTION
D		
C		
B		
A		
Z	1405/05	FIRST ISSUED

	DATE	Signaturs	
DESIGN	1405/05		
DRAWN	1405/05		
CONTROL	1405/05		
APPROVE	1405/05		
FILE NO.			

CLIENT:

BIARJEMAND CEMENT COMPANY

CONSULTANT:

PAYA NIROU PAZH CO.

PROJECT:

BIARJMAND CEMENT

CO. 63 Kv T/L

TITLE :

PLAN AND PROFILE

PROJECT NO :

TENDER NO :

DOC NO :

SCALE :

UNIT :

SHEET :

NEXT SHEET :

PLS-CADD Drawing

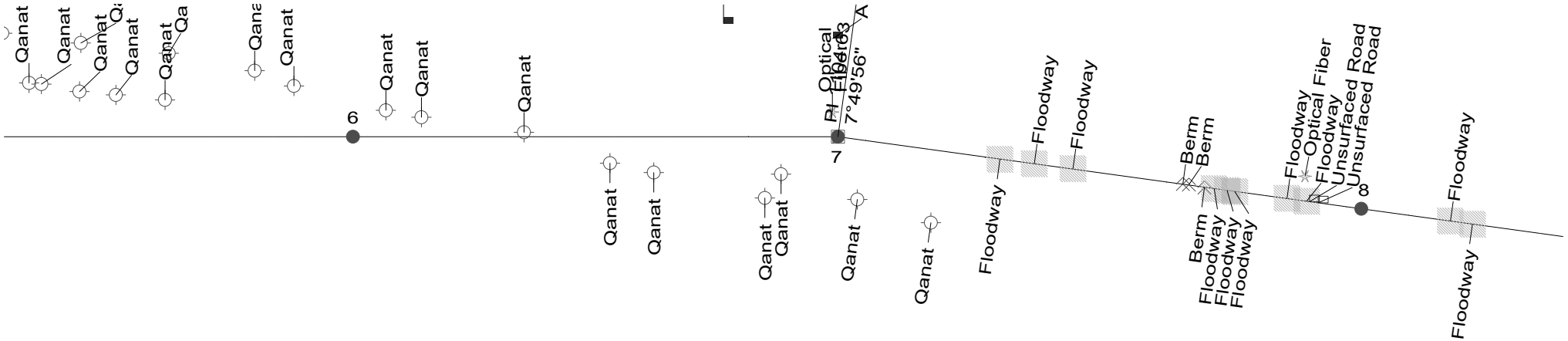

30.0 m Horiz. Scale
12.0 m Vert. Scale
North

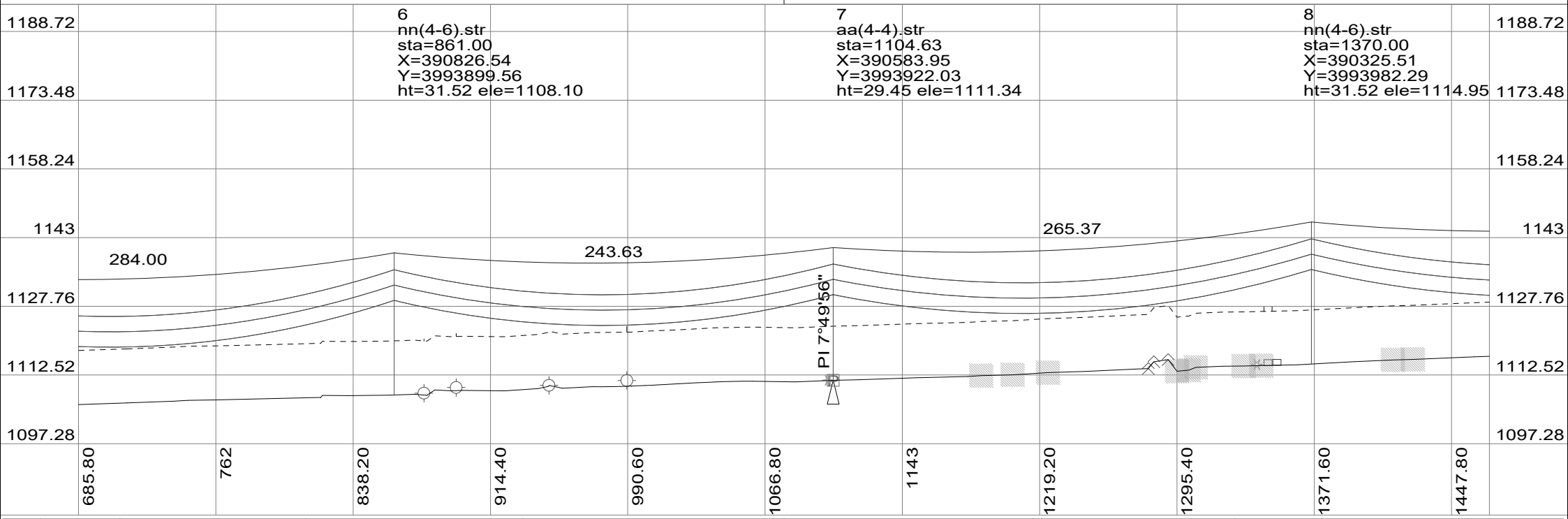

REV.	DATE	DESCRIPTION
D		
C		
B		
A		
Z	1405/05	FIRST ISSUED

	DATE	Signaturs	
DESIGN	1405/05		
DRAWN	1405/05		
CONTROL	1405/05		
APPROVE	1405/05		
FILE NO.			

CLIENT:
BIARJEMAND CEMENT COMPANY

CONSULTANT:
PAYA NIROU PAZH CO.

PROJECT:
BIARJMAND CEMENT
CO. 63 Kv T/L

TITLE :
PLAN AND PROFILE

PROJECT NO :
TENDER NO :
DOC NO :

SCALE :
UNIT :
SHEET :
NEXT SHEET :

PLS-CADD Drawing



30.0 m Horiz. Scale

12.0 m Vert. Scale

North

9
nn(4-6).str
sta=1660.00
X=390043.09
Y=3994048.14
ht=31.52 ele=1119.15

10
nn(4-6).str
sta=1953.00
X=389757.74
Y=3994114.67
ht=31.52 ele=1122.81

1203.96
1188.72
1173.48
1158.24
1143
1127.76
1112.52

290.00
293.00
290.00

1447.80
1524
1600.20
1676.40
1752.60
1828.80
1905
1981.20
2057.40
2133.60
2209.80

REV.	DATE	DESCRIPTION
D		
C		
B		
A		
Z	1405/05	FIRST ISSUED

	DATE	Signaturs	
DESIGN	1405/05		
DRAWN	1405/05		
CONTROL	1405/05		
APPROVE	1405/05		
FILE NO.			

CLIENT:

BIARJEMAND CEMENT COMPANY

CONSULTANT:

PAYA NIROU PAZH CO.

PROJECT:

BIARJMAND CEMENT

CO. 63 Kv T/L

TITLE :

PLAN AND PROFILE

PROJECT NO :

TENDER NO :

DOC NO :

SCALE :

UNIT :

SHEET :

NEXT SHEET :

PLS-CADD Drawing



30.0 m Horiz. Scale

12.0 m Vert. Scale

North

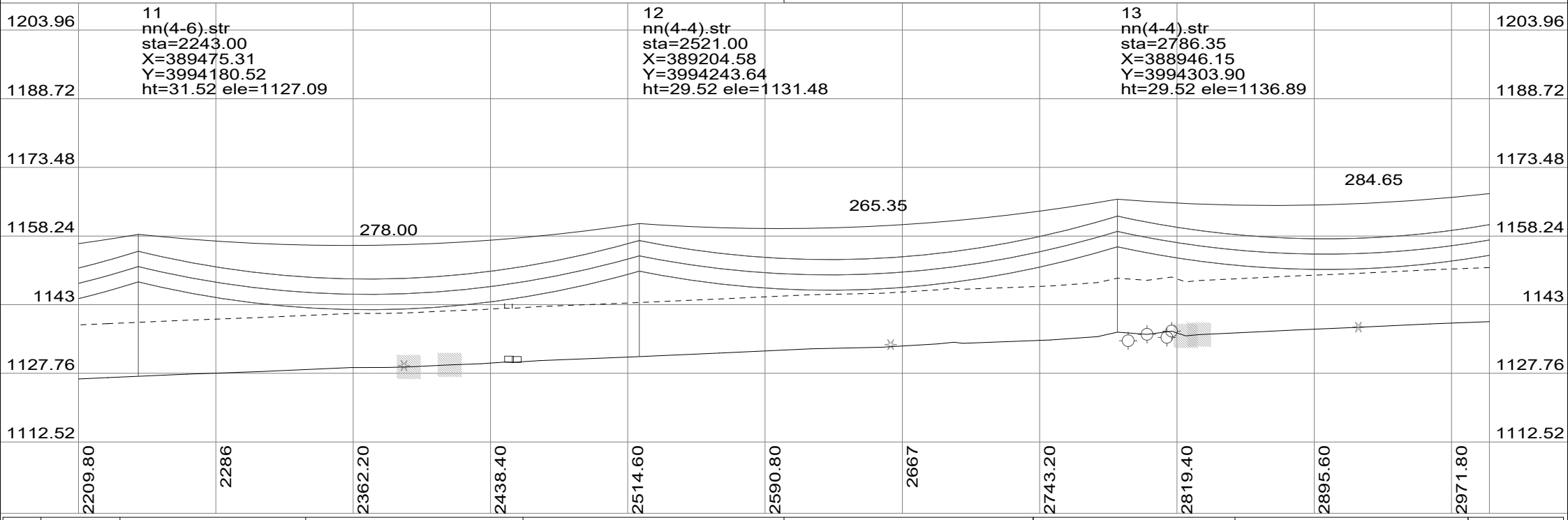

D		
C		
B		
A		
Z	1405/05	FIRST ISSUED
REV.	DATE	DESCRIPTION

DATE	Signaturs	
1405/05		DESIGN
1405/05		DRAWN
1405/05		CONTROL
1405/05		APPROVE
		FILE NO.

CLIENT:

BIARJEMAND CEMENT COMPANY

CONSULTANT:

PAYA NIROU PAZH CO.

PROJECT:

BIARJMAND CEMENT

CO. 63 Kv T/L

TITLE :

PLAN AND PROFILE

PROJECT NO :

TENDER NO :

DOC NO :

SCALE :

UNIT :

SHEET :

NEXT SHEET :

PLS-CADD Drawing

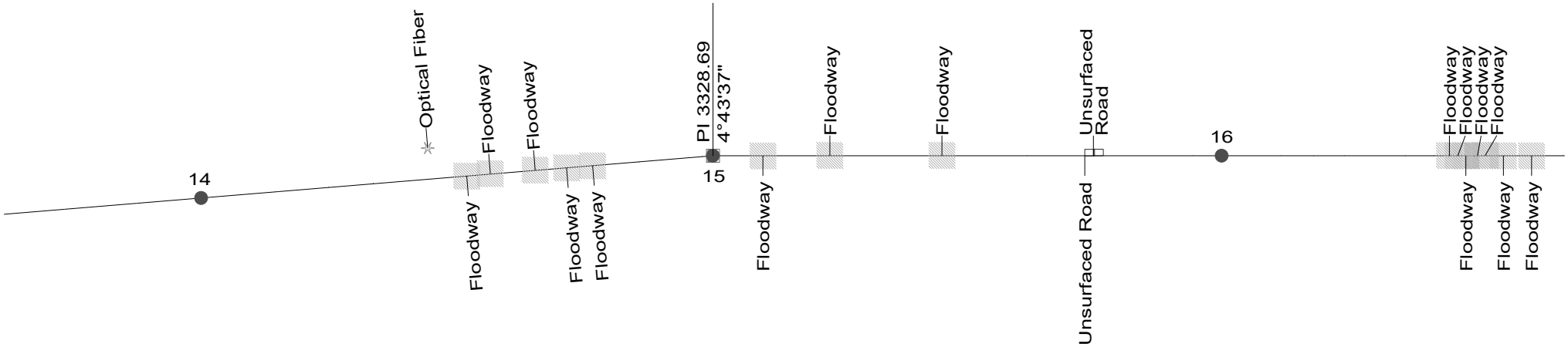

30.0 m Horiz. Scale

12.0 m Vert. Scale

North

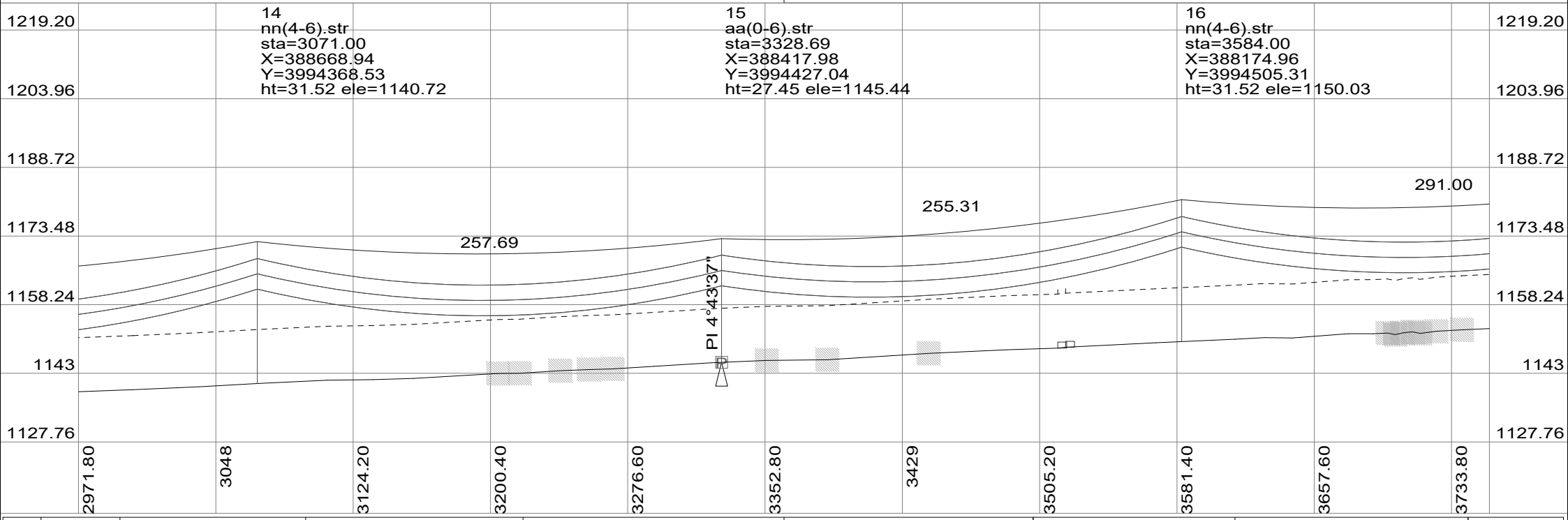

REV.	DATE	DESCRIPTION
D		
C		
B		
A		
Z	1405/05	FIRST ISSUED

	DATE	Signaturs	
DESIGN	1405/05		
DRAWN	1405/05		
CONTROL	1405/05		
APPROVE	1405/05		
FILE NO.			

CLIENT:

BIARJEMAND CEMENT COMPANY

CONSULTANT:

PAYA NIROU PAZH CO.

PROJECT:

BIARJMAND CEMENT

CO. 63 Kv T/L

TITLE :

PLAN AND PROFILE

PROJECT NO :

TENDER NO :

DOC NO :

SCALE :

UNIT :

SHEET :

NEXT SHEET :

PLS-CADD Drawing

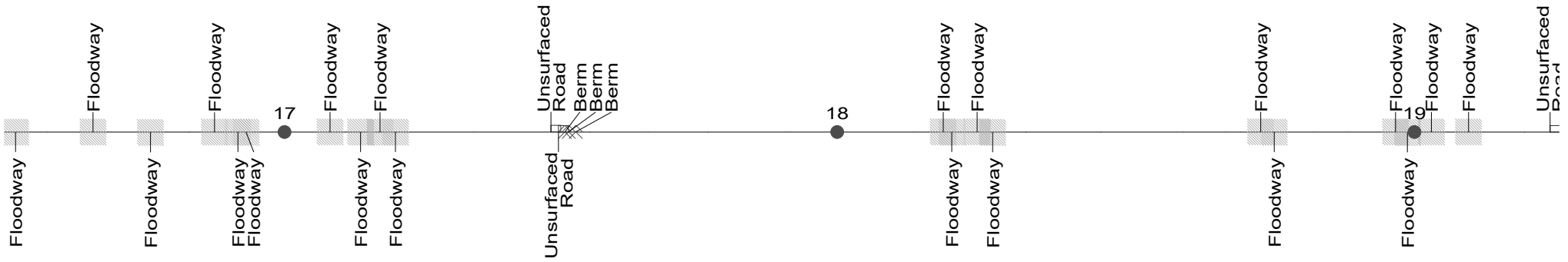

30.0 m Horiz. Scale

12.0 m Vert. Scale

North

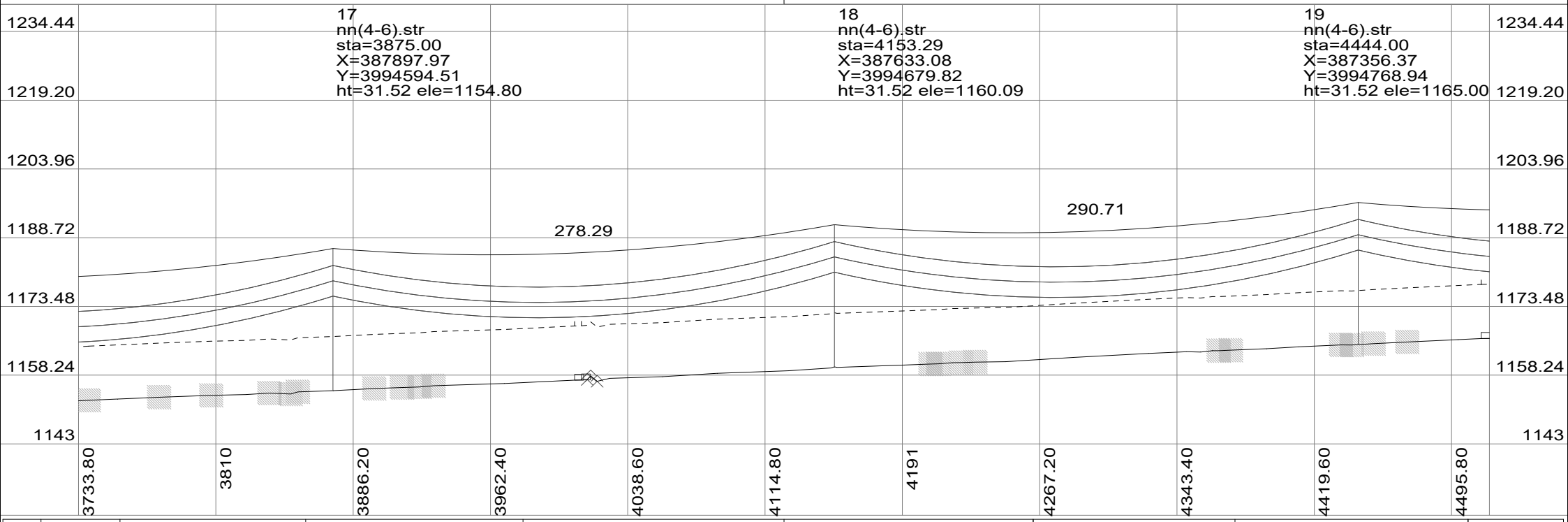

REV.	DATE	DESCRIPTION
D		
C		
B		
A		
Z	1405/05	FIRST ISSUED

	DATE	Signaturs	
DESIGN	1405/05		
DRAWN	1405/05		
CONTROL	1405/05		
APPROVE	1405/05		
FILE NO.			

CLIENT:

BIARJEMAND CEMENT COMPANY

CONSULTANT:

PAYA NIROU PAZH CO.

PROJECT:

BIARJMAND CEMENT

CO. 63 Kv T/L

TITLE :

PLAN AND PROFILE

PROJECT NO :

TENDER NO :

DOC NO :

SCALE :

UNIT :

SHEET :

NEXT SHEET :

PLS-CADD Drawing



30.0 m Horiz. Scale

12.0 m Vert. Scale

North

20
nn(4-6).str
sta=4748.28
X=387066.73
Y=3994862.22
ht=31.52 ele=1171.11

21
nn(4-6).str
sta=5030.00
X=386798.58
Y=3994948.58
ht=31.52 ele=1178.56

304.28

281.72

295.00

1249.68
1234.44
1219.20
1203.96
1188.72
1173.48
1158.24

4495.80
4572
4648.20
4724.40
4800.60
4876.80
4953
5029.20
5105.40
5181.60
5257.80

REV.	DATE	DESCRIPTION
D		
C		
B		
A		
Z	1405/05	FIRST ISSUED

	DATE	Signaturs	
DESIGN	1405/05		
DRAWN	1405/05		
CONTROL	1405/05		
APPROVE	1405/05		
FILE NO.			

CLIENT:

BIARJEMAND CEMENT COMPANY

CONSULTANT:

PAYA NIROU PAZH CO.

PROJECT:

BIARJMAND CEMENT

CO. 63 Kv T/L

TITLE :

PLAN AND PROFILE

PROJECT NO :

TENDER NO :

DOC NO :

SCALE :

UNIT :

SHEET :

NEXT SHEET :

PLS-CADD Drawing

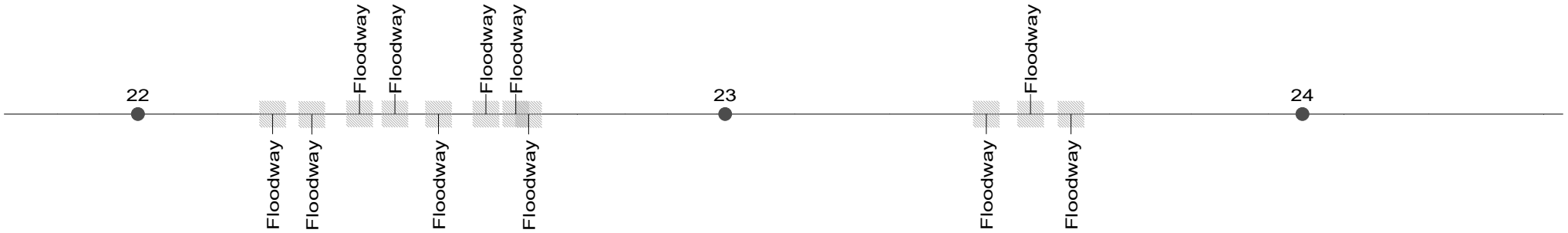

30.0 m Horiz. Scale
12.0 m Vert. Scale

North

22
nn(4-6).str
sta=5325.00
X=386517.79
Y=3995039.01
ht=31.52 ele=1186.55

23
aa(4-5).str
sta=5620.00
X=386236.99
Y=3995129.44
ht=30.45 ele=1195.21

24
nn(4-6).str
sta=5910.00
X=385960.95
Y=3995218.34
ht=31.52 ele=1203.78

295.00
290.00

1264.92
1249.68
1234.44
1219.20
1203.96
1188.72
1173.48

5257.80
5334
5410.20
5486.40
5562.60
5638.80
5715
5791.20
5867.40
5943.60
6019.80

REV.	DATE	DESCRIPTION
D		
C		
B		
A		
Z	1405/05	FIRST ISSUED

	DATE	Signaturs	
DESIGN	1405/05		
DRAWN	1405/05		
CONTROL	1405/05		
APPROVE	1405/05		
FILE NO.			

CLIENT:
BIARJEMAND CEMENT COMPANY

CONSULTANT:
PAYA NIROU PAZH CO.

PROJECT:
BIARJMAND CEMENT
CO. 63 Kv T/L

TITLE :
PLAN AND PROFILE

PROJECT NO :
TENDER NO :
DOC NO :

SCALE :
UNIT :
SHEET :
NEXT SHEET :

PLS-CADD Drawing

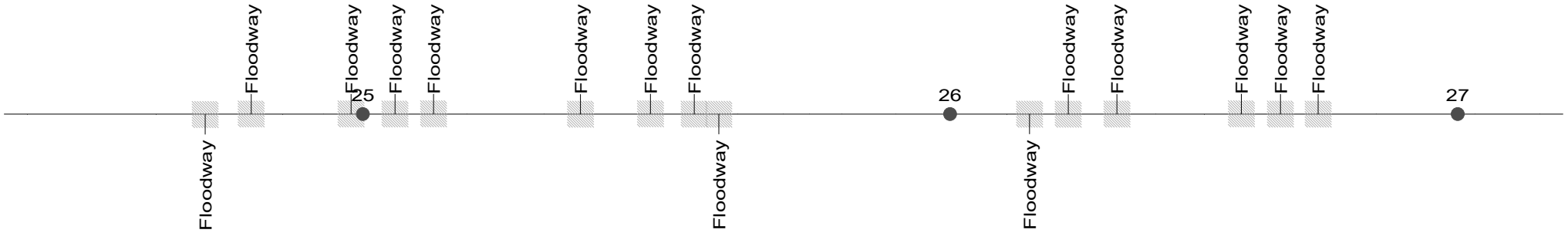

30.0 m Horiz. Scale
12.0 m Vert. Scale

North

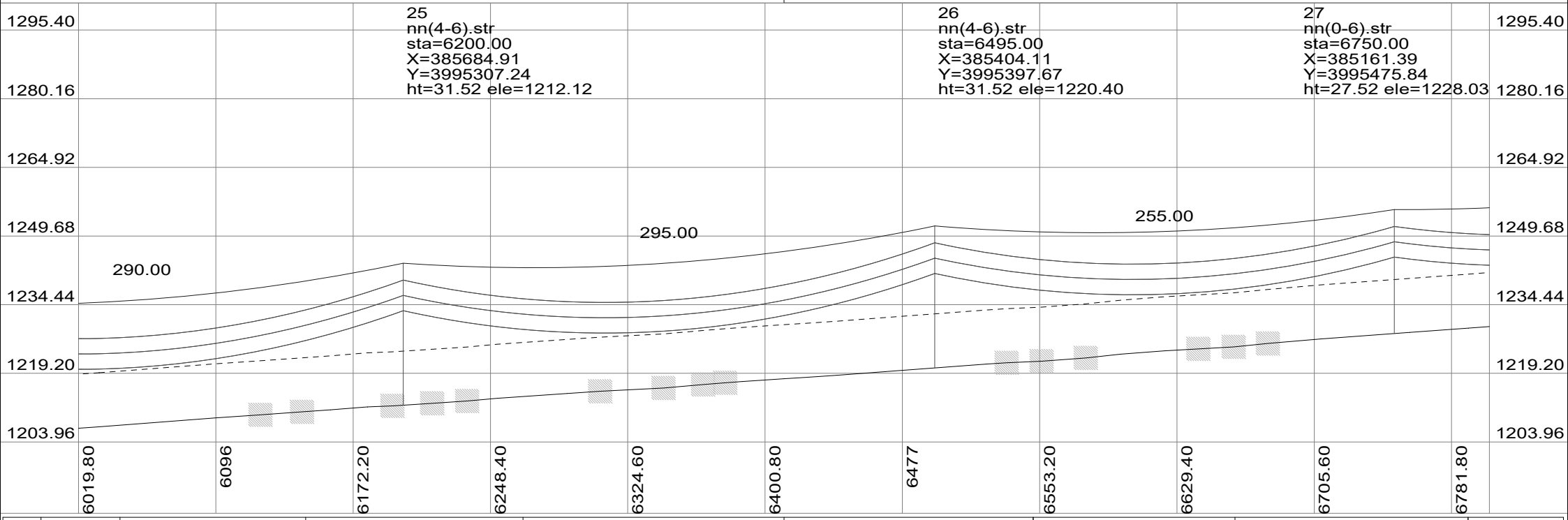

REV.	DATE	DESCRIPTION
D		
C		
B		
A		
Z	1405/05	FIRST ISSUED

	DATE	Signaturs	
DESIGN	1405/05		
DRAWN	1405/05		
CONTROL	1405/05		
APPROVE	1405/05		
FILE NO.			

CLIENT:

BIARJEMAND CEMENT COMPANY

CONSULTANT:

PAYA NIROU PAZH CO.

PROJECT:

BIARJMAND CEMENT

CO. 63 Kv T/L

TITLE :

PLAN AND PROFILE

PROJECT NO :

TENDER NO :

DOC NO :

SCALE :

UNIT :

SHEET :

NEXT SHEET :

PLS-CADD Drawing

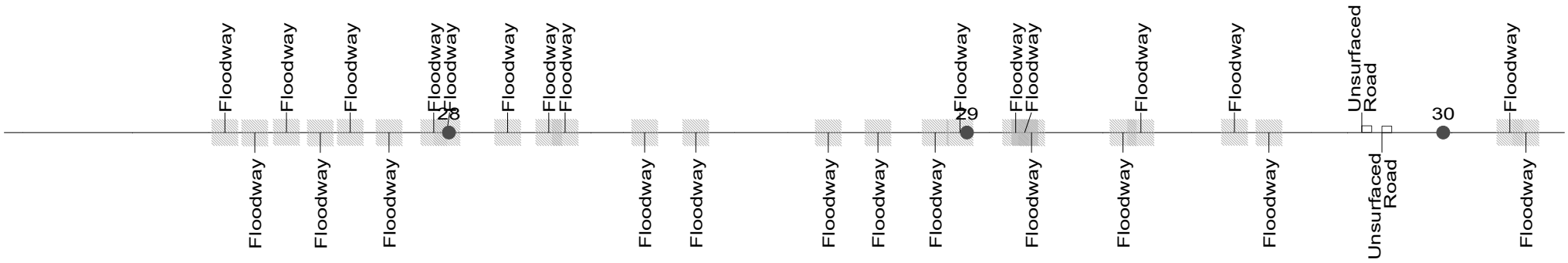

30.0 m Horiz. Scale
12.0 m Vert. Scale

North

28
nn(4-6).str
sta=7005.00
X=384918.67
Y=3995554.01
ht=31.52 ele=1235.68

29
nn(0-6).str
sta=7265.00
X=384671.19
Y=3995633.71
ht=27.52 ele=1244.25

30
nn(4-4).str
sta=7504.00
X=384443.69
Y=3995706.98
ht=29.52 ele=1253.43

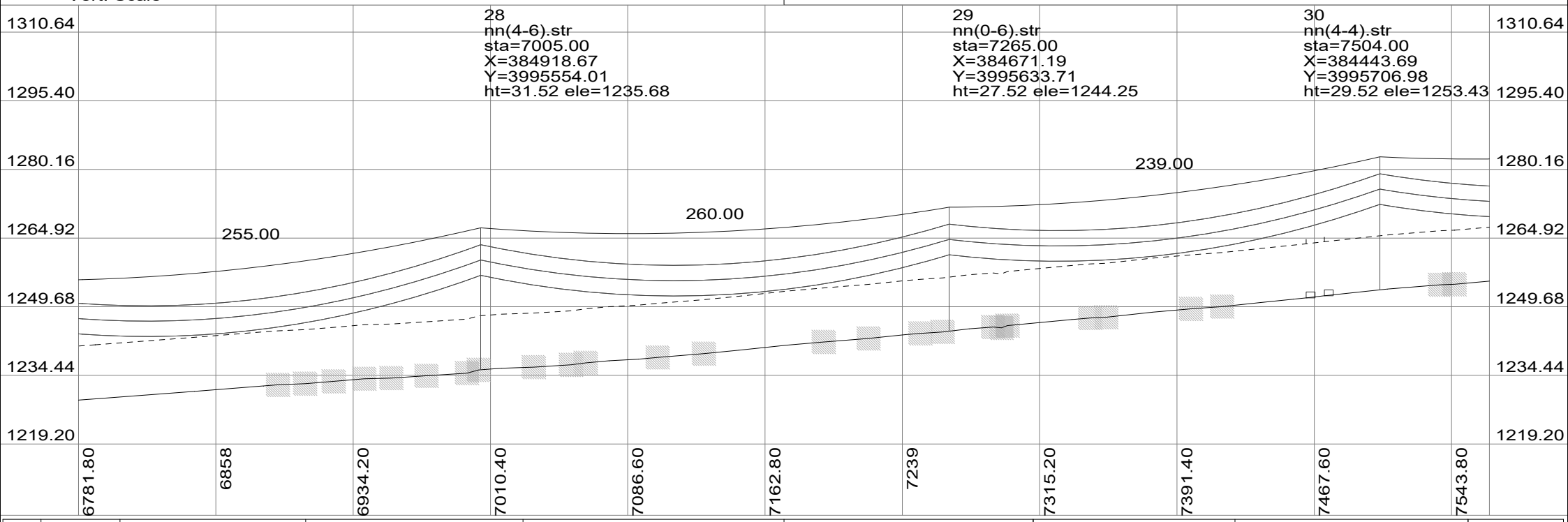

REV.	DATE	DESCRIPTION
D		
C		
B		
A		
Z	1405/05	FIRST ISSUED

DATE	Signaturs	
1405/05		DESIGN
1405/05		DRAWN
1405/05		CONTROL
1405/05		APPROVE
		FILE NO.

CLIENT:

BIARJEMAND CEMENT COMPANY

CONSULTANT:

PAYA NIROU PAZH CO.

PROJECT:

BIARJMAND CEMENT

CO. 63 Kv T/L

TITLE :

PLAN AND PROFILE

PROJECT NO :

TENDER NO :

DOC NO :

SCALE :

UNIT :

SHEET :

NEXT SHEET :

PLS-CADD Drawing

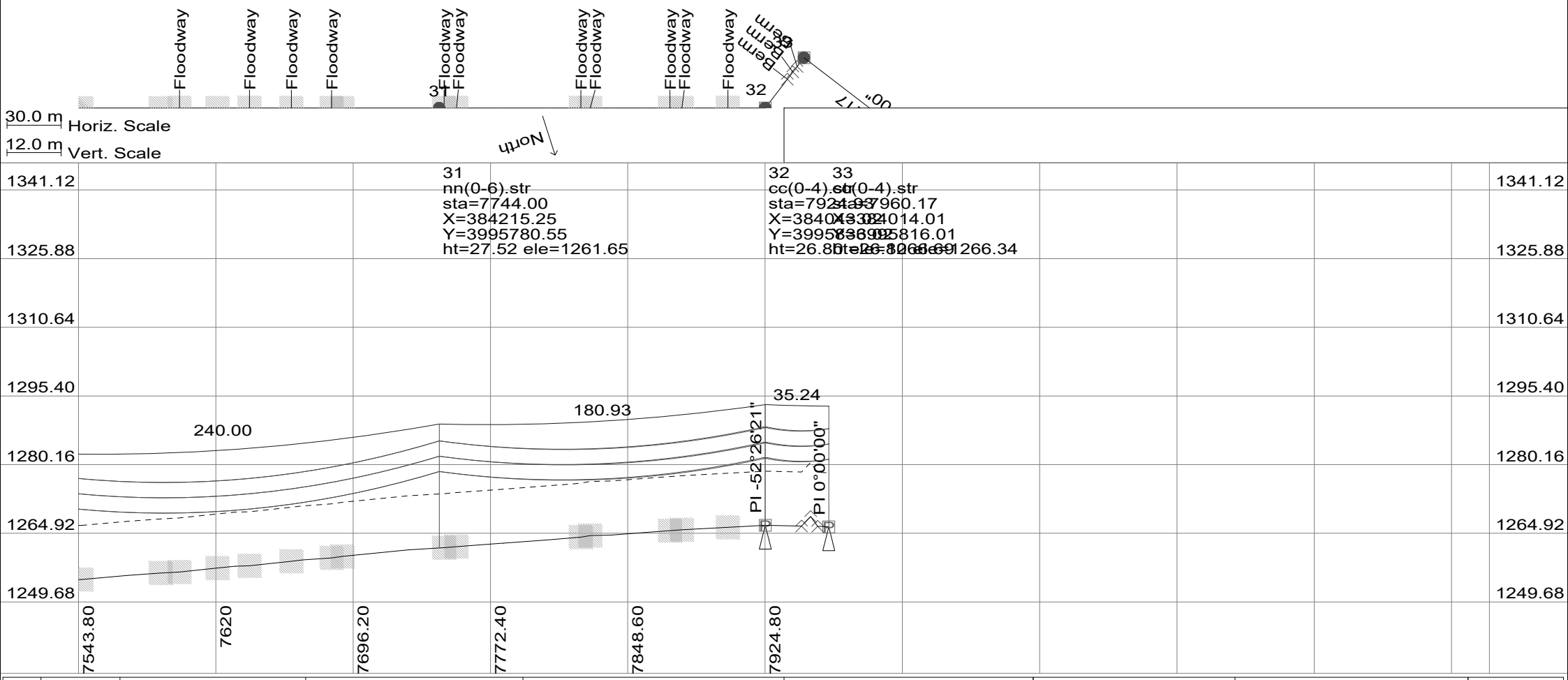

REV.	DATE	DESCRIPTION
D		
C		
B		
A		
Z	1405/05	FIRST ISSUED

	DATE	Signaturs	
DESIGN	1405/05		
DRAWN	1405/05		
CONTROL	1405/05		
APPROVE	1405/05		
FILE NO.			

CLIENT:

BIARJEMAND CEMENT COMPANY

CONSULTANT:

PAYA NIROU PAZH CO.

PROJECT:

BIARJMAND CEMENT

CO. 63 Kv T/L

TITLE :

PLAN AND PROFILE

PROJECT NO :

TENDER NO :

DOC NO :

SCALE :

UNIT :

SHEET :

NEXT SHEET :

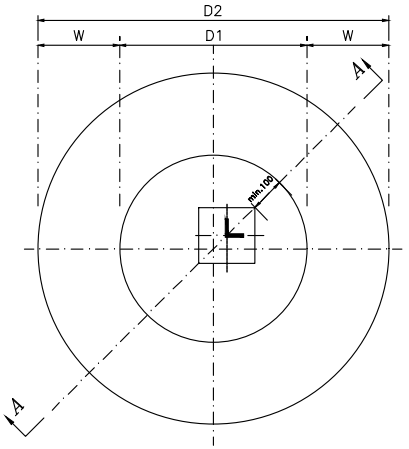

TOP VIEW

Dimensions

a (mm)	D1 (mm)	D2 (mm)	W (mm)	h1 (mm)	h2 (mm)	h3 (mm)	h4 (mm)	H (mm)
500	900	1500	300	min:300 max:800	2100	450	100	2550

	SHAPE (LENGTH IN Cm)	No.	ϕ (mm)	UNIT LENGTH (m)	TOTAL LENGTH (m)	UNIT WEIGHT (Kg)	TOTAL WEIGHT (Kg)
1	240 20	12	16	2.60	31.20	1.578	49.23
2	10	8	10	2.55	20.44	0.617	12.61
3	10 35 35	6 9	10	1.60	9.60 14.40	0.617	5.92 8.88
4	R300mm~110 R800mm~160	12	16	1.10 1.60	13.20 19.20	1.578	20.83 30.29

Volumes	
Excavation (m3)	2.03
Concrete (m3)	min: 1.93 max: 2.05
Rebar (Kg)	min: 88.6 max: 101.0
Lean Concrete (m3)	0.18

NOTES:

1- ALL DIMENSIONS ARE IN mm.
2- CONCRETE SHOULD HAVE 300 Kg /cm2 COMPRESSIVE STRENGTH AFTER 28 DAYS ON CYLINDRICAL SPECIMEN.
3- REBARS SHOULD HAVE A YIELD POINT OF 4000 Kg/cm2.
4- LEAN CONCRETE SHOULD HAVE 150 Kg CEMENT PER CUBIC METER OF MIXED CONCRETE.
5- CONCRETE COVER IS 75 mm.
6- BACK FILLING SHOULD BE COMPACTED UP TO 95% A.A.S.H.T.O. MODIFIED
7- LAP SPLICE LENGTH VERTICAL BARS SHALL BE AS FOLLOWS
FOR SINGLE BARS : 50 × BAR DIAMETER.
FOR BUNDLED BARS : 60 × BAR DIAMETER.
8- CONCRETE TO BE POURED WITHOUT FORMWORKS AGAINST UNDISTURBED FACES OF FOUNDATION EXCAVATION CONCRETE TO BE POURED AFTER STUB SETTING & MINIMUM ELAPSED TIME FROM EXCAVATION FORMWORKS ARE USED ONLY FOR CHIMNEY.
9- THE DETAILS OF STUB (SLOPE , LENGTH EMBODIMENT IN CONCRETE) TO BE SEEN IN STUB SETTING DRAWING.
10- FOR CONCRETE SPECIFICATION & TYPE OF CEMENT REFER TO PROJECT SPECIFICATION.
11- FOR PROTECTION OF CONCRETE SURFACES REFER TO PROJECT SPECIFICATION.
12- THE DRAWING IS NOT TO SCALE

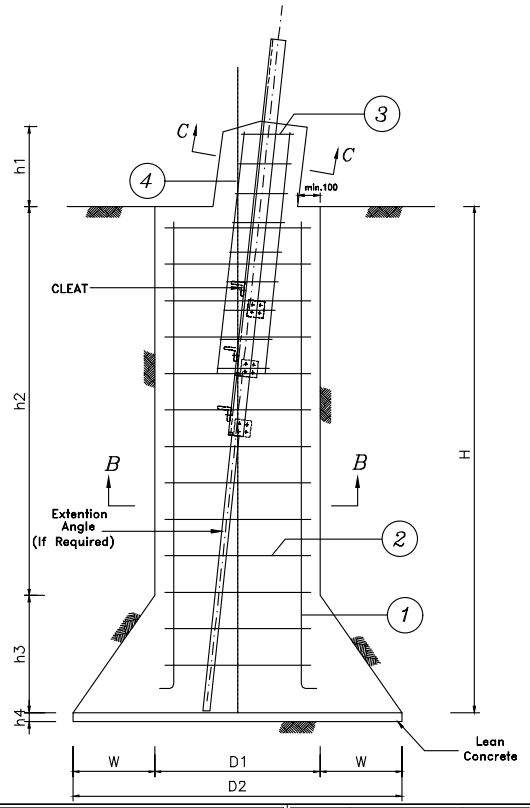

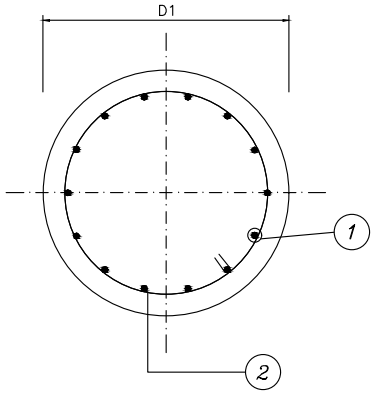

SECTION B–B

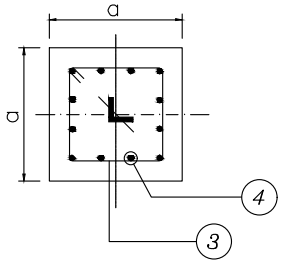

SECTION C–C

REV.	DATE	DESCRIPTION
D		
C		
B		
A		
Z	05/05	ORIGINAL ISSUED.

DATE	Signaturs	
		DESIGN
		DRAWN
		CONTROL
		APPROVE
		FILE NO.

CLIENT: BIARJEMAND CEMENT COMPANY

CONSULTANT: PAYA NIROU PAZH CO.

PROJECT: BIARJMAND CEMENT CO. 63 Kv T/L

TITLE : Foundation Type NN

SCALE :
UNIT :
SHEET :
NEXT SHEET :
TENDER NO :
CONTRACT NO :
DWG NO :

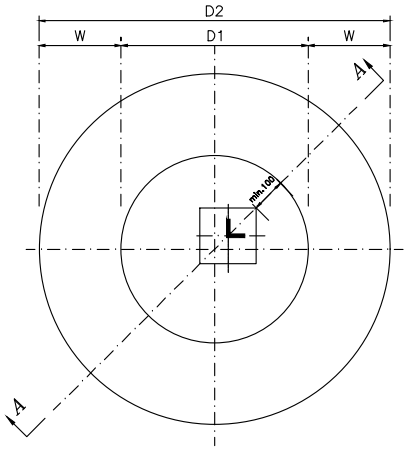

TOP VIEW

Dimensions								
a (mm)	D1 (mm)	D2 (mm)	W (mm)	h1 (mm)	h2 (mm)	h3 (mm)	h4 (mm)	H (mm)
600	1200	2000	400	min:300 max:800	2600	600	100	3200

Volumes	
Excavation (m3)	4.48
Concrete (m3)	min: 4.28 max: 4.46
Rebar (Kg)	min: 139.1 max: 155.5
Lean Concrete (m3)	0.31

	SHAPE (LENGTH IN Cm)	No.	ϕ (mm)	UNIT LENGTH (m)	TOTAL LENGTH (m)	UNIT WEIGHT (Kg)	TOTAL WEIGHT (Kg)
1	305 30	16	16	3.35	53.60	1.578	84.58
2	10	9	10	3.5	31.47	0.617	19.42
3	10 45 45	6 9	10	2.00	12.00 18.00	0.617	7.40 11.10
4	R300mm~110 R800mm~160	16	16	1.10 1.60	17.60 25.60	1.578	27.77 40.39

NOTES:

1- ALL DIMENSIONS ARE IN mm.
2- CONCRETE SHOULD HAVE 300 Kg /cm2 COMPRESSIVE STRENGTH AFTER 28 DAYS ON CYLINDRICAL SPECIMEN.
3- REBARS SHOULD HAVE A YIELD POINT OF 4000 Kg/cm2.
4- LEAN CONCRETE SHOULD HAVE 150 Kg CEMENT PER CUBIC METER OF MIXED CONCRETE.
5- CONCRETE COVER IS 75 mm.
6- BACK FILLING SHOULD BE COMPACTED UP TO 95% A.A.S.H.T.O. MODIFIED
7- LAP SPLICE LENGTH VERTICAL BARS SHALL BE AS FOLLOWS
FOR SINGLE BARS : 50 × BAR DIAMETER.
FOR BUNDLED BARS : 60 × BAR DIAMETER.
8- CONCRETE TO BE POURED WITHOUT FORMWORKS AGAINST UNDISTURBED FACES OF FOUNDATION EXCAVATION CONCRETE TO BE POURED AFTER STUB SETTING & MINIMUM ELAPSED TIME FROM EXCAVATION FORMWORKS ARE USED ONLY FOR CHIMNEY.
9- THE DETAILS OF STUB (SLOPE , LENGTH EMBODIMENT IN CONCRETE) TO BE SEEN IN STUB SETTING DRAWING.
10- FOR CONCRETE SPECIFICATION & TYPE OF CEMENT REFER TO PROJECT SPECIFICATION.
11- FOR PROTECTION OF CONCRETE SURFACES REFER TO PROJECT SPECIFICATION.
12- THE DRAWING IS NOT TO SCALE

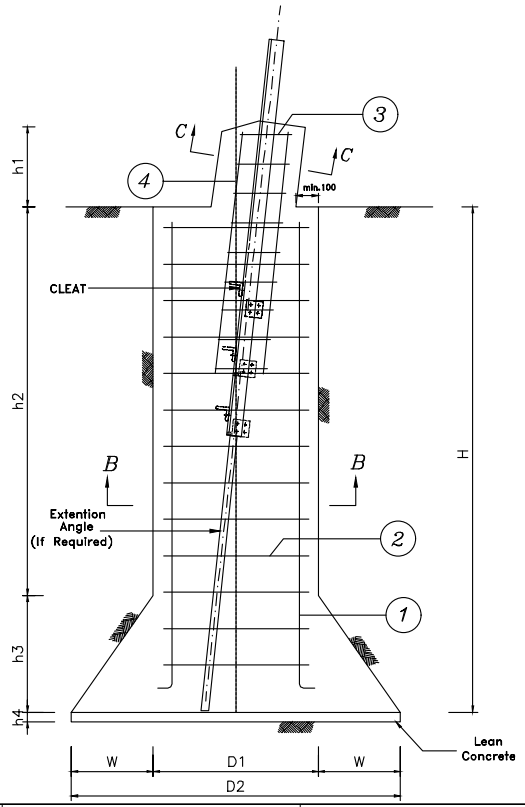

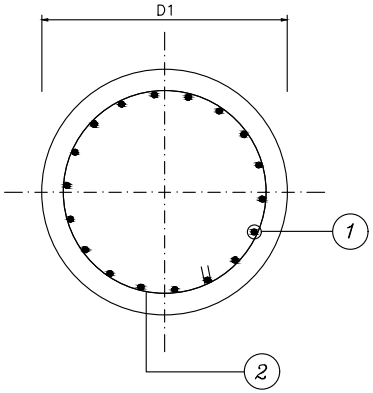

SECTION B-B

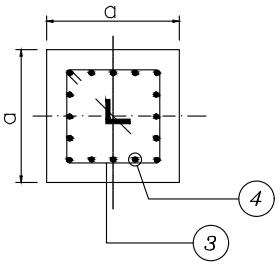

SECTION C-C

REV.	DATE	DESCRIPTION
D		
C		
B		
A		
Z	05/05	ORIGINAL ISSUED.

	DATE	Signaturs	
			DESIGN
			DRAWN
			CONTROL
			APPROVE
			FILE NO.

CLIENT: BIARJEMAND CEMENT COMPANY

CONSULTANT: PAYA NIROU PAZH CO.

PROJECT: BIARJMAND CEMENT CO. 63 Kv T/L

TITLE : Foundation Type AA

SCALE :
UNIT :
SHEET :
NEXT SHEET :
TENDER NO :
CONTRACT NO :
DWG NO :

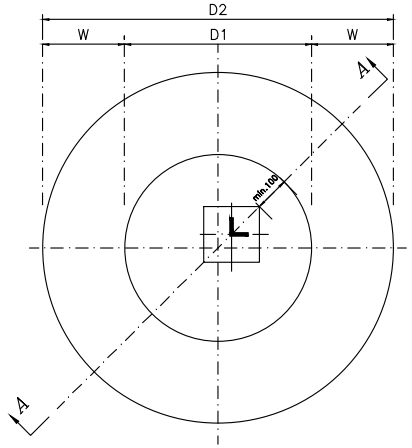

TOP VIEW

Dimensions

a (mm)	D1 (mm)	D2 (mm)	W (mm)	h1 (mm)	h2 (mm)	h3 (mm)	h4 (mm)	H (mm)
600	1400	2300	450	min:300 max:800	3000	700	100	3700

	SHAPE (LENGTH IN Cm)	No.	ϕ (mm)	UNIT LENGTH (m)	TOTAL LENGTH (m)	UNIT WEIGHT (Kg)	TOTAL WEIGHT (Kg)
1	355 35	20	16	3.90	78.00	1.578	123.08
2	10	11	10	4.12	45.375	0.617	27.99
3	10 45 45	6 9	10	2.00	12.00 18.00	0.617	7.40 11.10
4	R300mm~110 R800mm~160	16	16	1.10 1.60	17.60 25.60	1.578	27.77 40.39

Volumes

Excavation (m3)	6.95
Concrete (m3)	min: 6.64 max: 6.82
Rebar (Kg)	min: 186.25 max: 202.58
Lean Concrete (m3)	0.41

NOTES:

1- ALL DIMENSIONS ARE IN mm.
2- CONCRETE SHOULD HAVE 300 Kg /cm2 COMPRESSIVE STRENGTH AFTER 28 DAYS ON CYLINDRICAL SPECIMEN.
3- REBARS SHOULD HAVE A YIELD POINT OF 4000 Kg/cm2.
4- LEAN CONCRETE SHOULD HAVE 150 Kg CEMENT PER CUBIC METER OF MIXED CONCRETE.
5- CONCRETE COVER IS 75 mm.
6- BACK FILLING SHOULD BE COMPACTED UP TO 95% A.A.S.H.T.O. MODIFIED
7- LAP SPLICE LENGTH VERTICAL BARS SHALL BE AS FOLLOWS
FOR SINGLE BARS : 50 × BAR DIAMETER.
FOR BUNDLED BARS : 60 × BAR DIAMETER.
8- CONCRETE TO BE POURED WITHOUT FORMWORKS AGAINST UNDISTURBED FACES OF FOUNDATION EXCAVATION CONCRETE TO BE POURED AFTER STUB SETTING & MINIMUM ELAPSED TIME FROM EXCAVATION FORMWORKS ARE USED ONLY FOR CHIMNEY.
9- THE DETAILS OF STUB (SLOPE , LENGTH EMBODIMENT IN CONCRETE) TO BE SEEN IN STUB SETTING DRAWING.
10- FOR CONCRETE SPECIFICATION & TYPE OF CEMENT REFER TO PROJECT SPECIFICATION.
11- FOR PROTECTION OF CONCRETE SURFACES REFER TO PROJECT SPECIFICATION.
12- THE DRAWING IS NOT TO SCALE

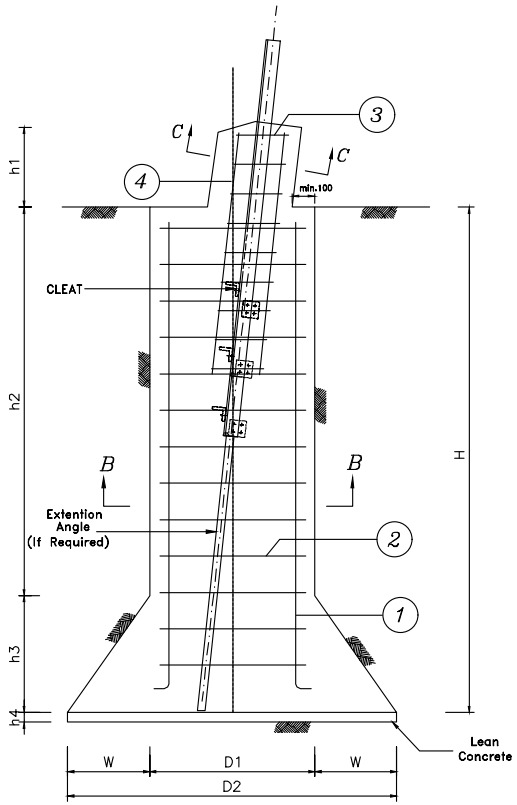

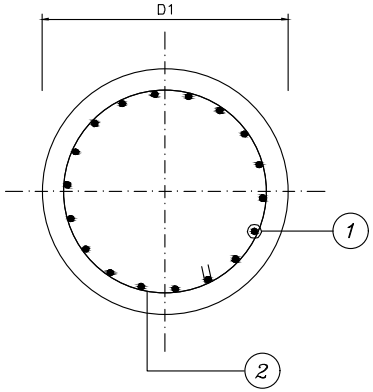

SECTION B–B

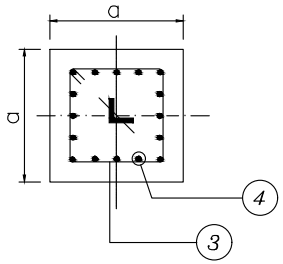

SECTION C–C

REV.	DATE	DESCRIPTION
D		
C		
B		
A		
Z	05/05	ORIGINAL ISSUED.

	DATE	Signaturs	
			DESIGN
			DRAWN
			CONTROL
			APPROVE
			FILE NO.

CLIENT: BIARJEMAND CEMENT COMPANY

CONSULTANT: PAYA NIROU PAZH CO.

PROJECT: BIARJMAND CEMENT CO. 63 Kv T/L

TITLE : Foundation Type CC

SCALE :
UNIT :
SHEET :
NEXT SHEET :
TENDER NO :
CONTRACT NO :
DWG NO :

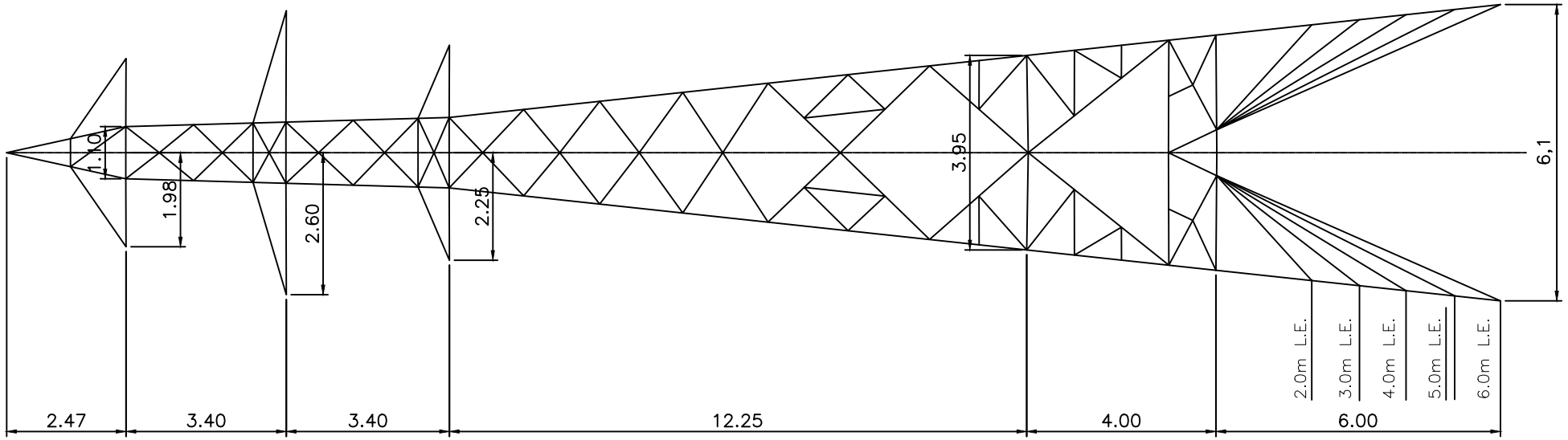

REV.	DATE	DESCRIPTION
D		
C		
B		
A		
Z	05/05	ORIGINAL ISSUED.

	DATE	Signaturs	
			DESIGN
			DRAWN
			CONTROL
			APPROVE
			FILE NO.

CLIENT:
BIARJEMAND CEMENT COMPANY

CONSULTANT:
PAYA NIROU PAZH CO.

PROJECT:
BIARJMAND CEMENT
CO. 63 Kv T/L

TITLE :
Tower Single Line Type NN

TENDER NO :
CONTRACT NO :
DWG NO :

SCALE :
UNIT :
SHEET :
NEXT SHEET :

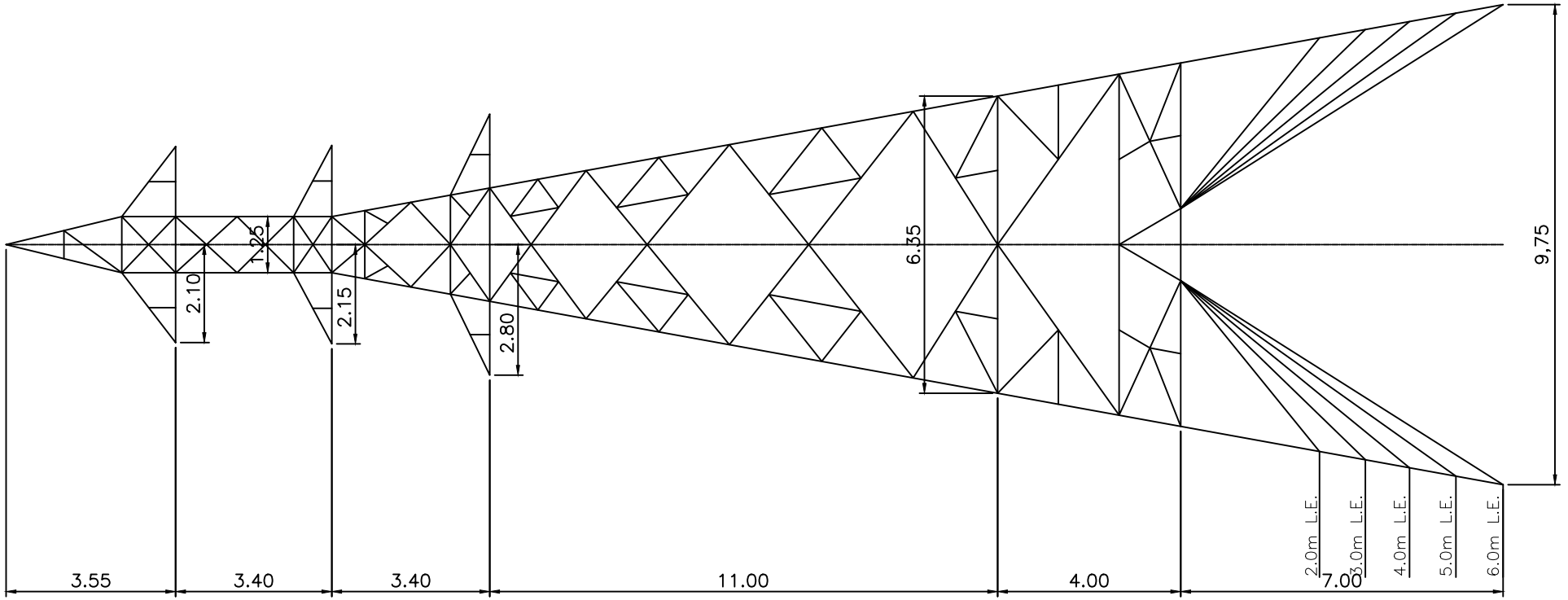

REV.	DATE	DESCRIPTION
D		
C		
B		
A		
Z	05/05	ORIGINAL ISSUED.

DATE	Signaturs	
		DESIGN
		DRAWN
		CONTROL
		APPROVE
		FILE NO.

CLIENT:
BIARJEMAND CEMENT COMPANY

CONSULTANT:
PAYA NIROU PAZH CO.

PROJECT:
BIARJMAND CEMENT
CO. 63 Kv T/L

TITLE :
Tower Single Line Type AA

TENDER NO :
CONTRACT NO :
DWG NO :

SCALE :
UNIT :
SHEET :
NEXT SHEET :

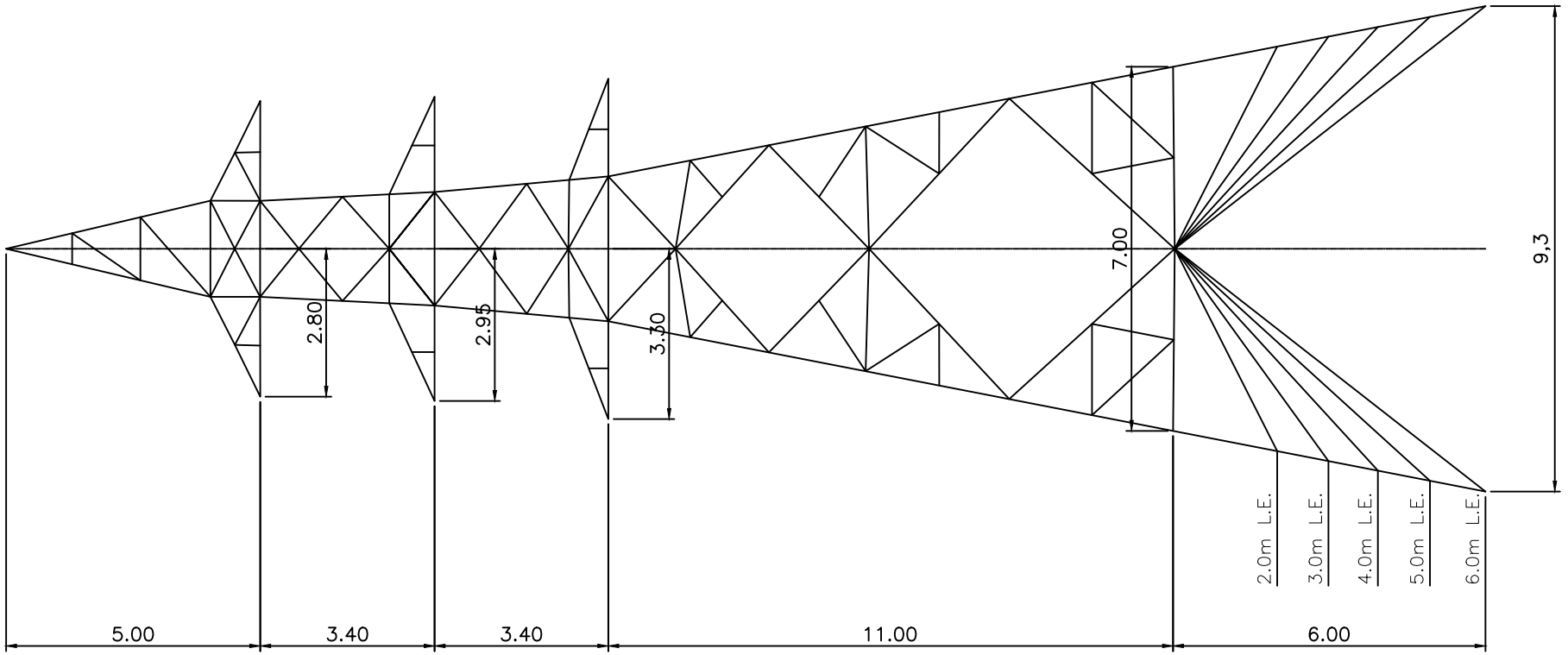

REV.	DATE	DESCRIPTION
D		
C		
B		
A		
Z	05/05	ORIGINAL ISSUED.

DATE	Signaturs	
		DESIGN
		DRAWN
		CONTROL
		APPROVE
		FILE NO.

CLIENT:
BIARJEMAND CEMENT COMPANY

CONSULTANT:
PAYA NIROU PAZH CO.

PROJECT:
BIARJMAND CEMENT
CO. 63 Kv T/L

TITLE :
Tower Single Line Type CC

TENDER NO :
CONTRACT NO :
DWG NO :

SCALE :
UNIT :
SHEET :
NEXT SHEET :

Date: Project:

TABLE OF LOADINGS (Tower Type:NN)

Description of Loading Case	Loading Case	Loading Type	63 KV. D.C./PHASE/NN TOWER SCHEDULE LOADS						
			S	C1	C2	C3	C4	C5	C6
NORMAL LOAD SF=2.5	1	a)VERT	1370	1950	1950	1950	1950	1950	1950
		b)TRAN.	650	835	835	835	835	835	835
		c)LONG							
		d)W.O.T.	120kg/m2 *1.5 on the Projected Area of One Face						
		e)D.LOAD	WEIGHT OF TOWER*(1.1 or 1.5)						
Broken Wire G.W. SF=1.5	2	a)VERT	1030	1950	1950	1950	1950	1950	1950
		b)TRAN.	485	835	835	835	835	835	835
		c)LONG	3070						
		d)W.O.T.	120kg/m2 *1.5 on the Projected Area of One Face						
		e)D.LOAD	WEIGHT OF TOWER*1.1						
Broken Wire ANY ONE CONDUCTOR SF=1.5	3	a)VERT	1370	1480	1950	1950	1950	1950	1950
		b)TRAN.	690	630	835	835	835	835	835
		c)LONG		2855					
		d)W.O.T.	120kg/m2 *1.5 on the Projected Area of One Face						
		e)D.LOAD	WEIGHT OF TOWER						
	4								

NOTES:
All The Loads Given Herein Under Are to be Considered as Design Loads. Minimum Safety Factor In The Design Of Structural Members Shall Be 2.5 Under Normal Condition And 1.5 Under Broken Condition.
Wind Load On Tower Shall Be Applied One Face Only And Without Any Safety Factor.

کارفرما:	مشاور:	پروژه:	عنوان:	آماده سازی:
شرکت سیمان بیارجمند	شرکت خدمات مهندسی پایا نیرو پاژ	خط ۶۳ کیلوولت دو مداره پست بیارجمند – پست کارخانه سیمان بیارجمند	بارگذاری برج های ۶۳ کیلوولت خط	کنترل و تصویب:

Date: Project:

TABLE OF LOADINGS (Tower Type:AA)

Description of Loading Case	Loading Case	Loading Type	63 KV. D.C./PHASE/AA TOWER SCHEDULE LOADS						
			S	C1	C2	C3	C4	C5	C6
NORMAL LOAD SF=2.5	1	a)VERT	915	1390	1390	1390	1390	1390	1390
		b)TRAN.	2280	3030	3030	3030	3030	3030	3030
		c)LONG							
		d)W.O.T.	120kg/m2 *1.5 on the Projected Area of Windward Face						
		e)D.LOAD	WEIGHT OF TOWER						
Broken Wire G.W. SF=1.5	2	a)VERT	690	1390	1390	1390	1390	1390	1390
		b)TRAN.	1250	3030	3030	3030	3030	3030	3030
		c)LONG	3070						
		d)W.O.T.	120kg/m2 *1.5 on the Projected Area of Windward Face						
		e)D.LOAD	WEIGHT OF TOWER						
Broken Wire ANY ONE CONDUCTOR SF=1.5	3	a)VERT	915	1080	1390	1390	1390	1390	1390
		b)TRAN.	2280	2480	3030	3030	3030	3030	3030
		c)LONG		4075					
		d)W.O.T.	120kg/m2 *1.5 on the Projected Area of Windward Face						
		e)D.LOAD	WEIGHT OF TOWER						
	4	a)VERT							
		b)TRAN.							
		c)LONG							
		d)W.O.T.							
		e)D.LOAD							

NOTES:

All The Loads Given Herein Under Are to be Considered as Design Loads. Minimum Safety Factor In The Design Of Structural Members Shall Be 2.5 Under Normal Condition And 1.5 Under Broken Condition. Wind Load On Tower Shall Be Applied One Face Only And Without Any Safety Factor

کارفرما:	مشاور:	پروژه:	عنوان:	آماده سازی:
شرکت سیمان بیارجمند	شرکت خدمات مهندسی پایا نیرو پاژ	خط ۶۳ کیلوولت دو مداره پست بیارجمند – پست کارخانه سیمان بیارجمند	بارگذاری برج های ۶۳ کیلوولت خط	کنترل و تصویب:

Date: Project:

TABLE OF LOADINGS (Tower Type:CC)

Description of Loading Case	Loading Case	Loading Type	63 KV. D.C./PHASE/CC TOWER SCHEDULE LOADS						
			S	C1	C2	C3	C4	C5	C6
Normal Load SF=2.5	1	a)VERT	915	1390	1390	1390	1390	1390	1390
		b)TRAN.	3505	4655	4655	4655	4655	4655	4655
		c)LONG							
		d)W.O.T.	120kg/m2 *1.5 on the Projected Area of Windward Face						
		e)D.LOAD	WEIGHT OF TOWER						
Broken Wire G.W. SF=1.5	2	a)VERT	690	1390	1390	1390	1390	1390	1390
		b)TRAN.	1860	4655	4655	4655	4655	4655	4655
		c)LONG	3070						
		d)W.O.T.	120kg/m2 *1.5 on the Projected Area of Windward Face						
		e)D.LOAD	WEIGHT OF TOWER						
Broken Wire ANY ONE CONDUCTOR SF=1.5	3	a)VERT	915	1080	1390	1390	1390	1390	1390
		b)TRAN.	3505	2480	4655	4655	4655	4655	4655
		c)LONG		4075					
		d)W.O.T.	120kg/m2 *1.5 on the Projected Area of Windward Face						
		e)D.LOAD	WEIGHT OF TOWER						
Dead End 0 DEGREE SF=2.5	4	a)VERT	915	1390	1390	1390	1390	1390	1390
		b)TRAN.	435	580	580	580	580	580	580
		c)LONG	3070	4070	4070	4070	4070	4070	4070
		d)W.O.T.	120kg/m2 *1.5 on the Projected Area of Windward Face						
		e)D.LOAD	WEIGHT OF TOWER						

NOTES:

All The Loads Given Herein Under Are to be Considered as Design Loads. Minimum Safety Factor In The Design Of Structural Members Shall Be 2.5 Under Normal Condition And 1.5 Under Broken Condition.

Wind Load On Tower Shall Be Applied One Face Only And Without Any Safety Factor

کارفرما:	مشاور:	پروژه:	عنوان:	آماده سازی:
شرکت سیمان بیارجمند	شرکت خدمات مهندسی پایا نیرو پاژ	خط ۶۳ کیلوولت دو مداره پست بیارجمند – پست کارخانه سیمان بیارجمند	بارگذاری برج های ۶۳ کیلوولت خط	کنترل و تصویب:

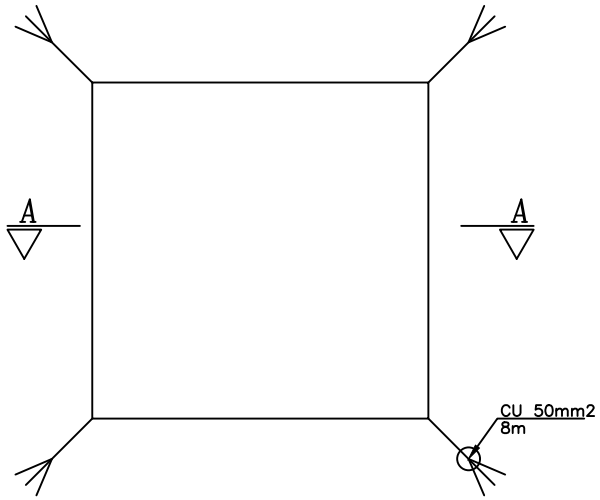

TOWER PLAN

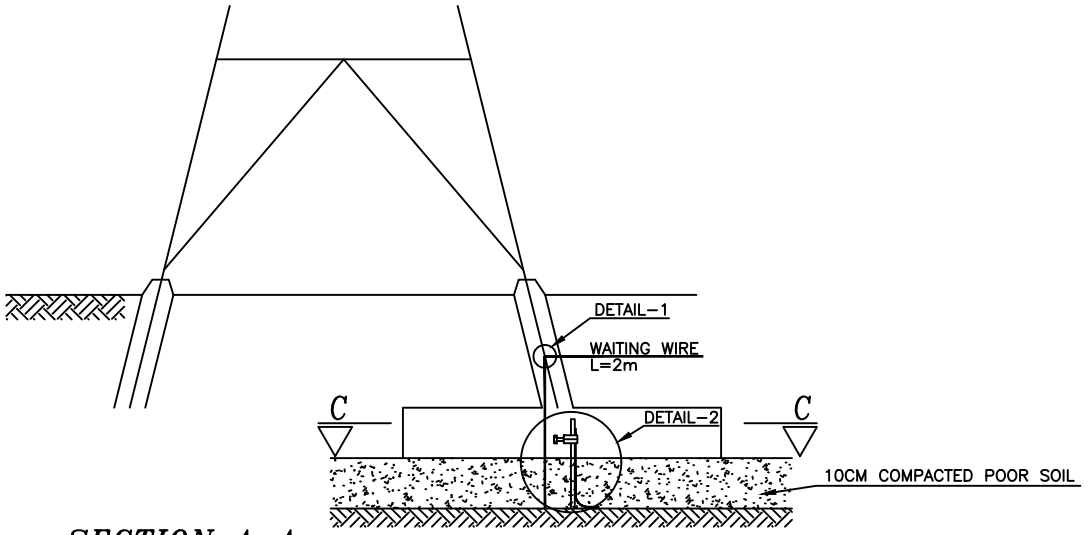

SECTION A–A

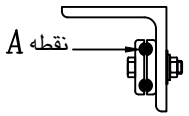

SECTION B–B

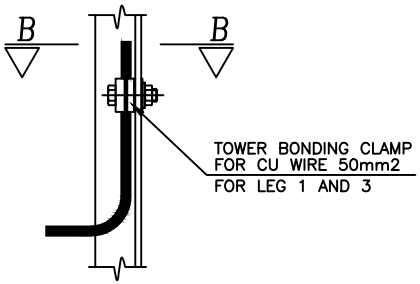

DETAIL 1

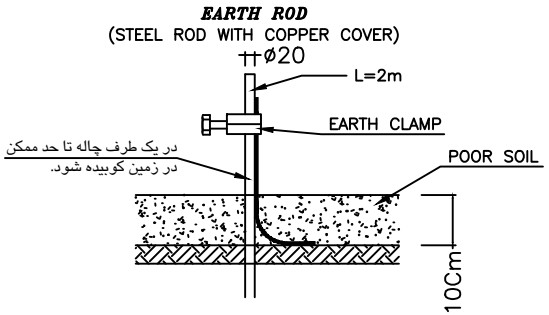

DETAIL 2

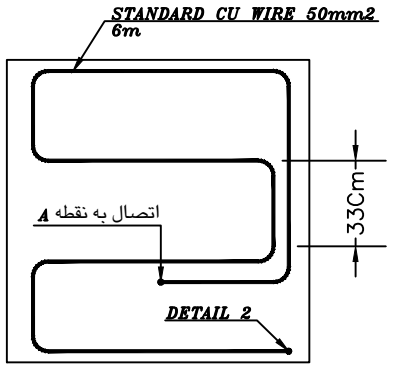

SECTION C–C

REV.	DATE	DESCRIPTION
D		
C		
B		
A		
Z	05/05	ORIGINAL ISSUED.

DATE	Signaturs	
		DESIGN
		DRAWN
		CONTROL
		APPROVE
		FILE NO.

CLIENT:
BIARJEMAND CEMENT COMPANY

CONSULTANT:
PAYA NIROU PAZH CO.

PROJECT:
BIARJMAND CEMENT
CO. 63 Kv T/L

TITLE :
Tower Earting system with one Rod

TENDER NO :
CONTRACT NO :
DWG NO :

SCALE :
UNIT :
SHEET :
NEXT SHEET :

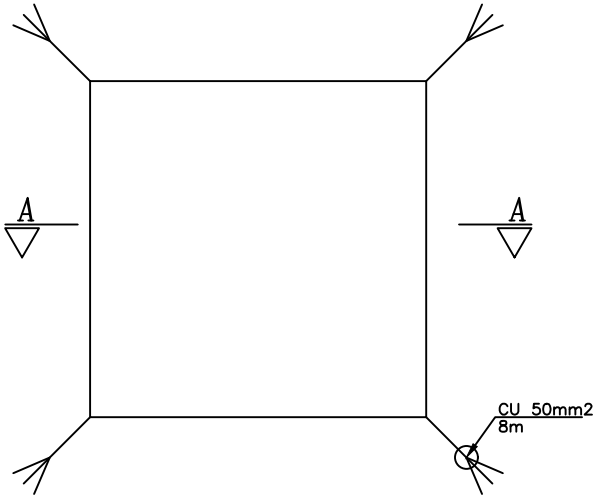

TOWER PLAN

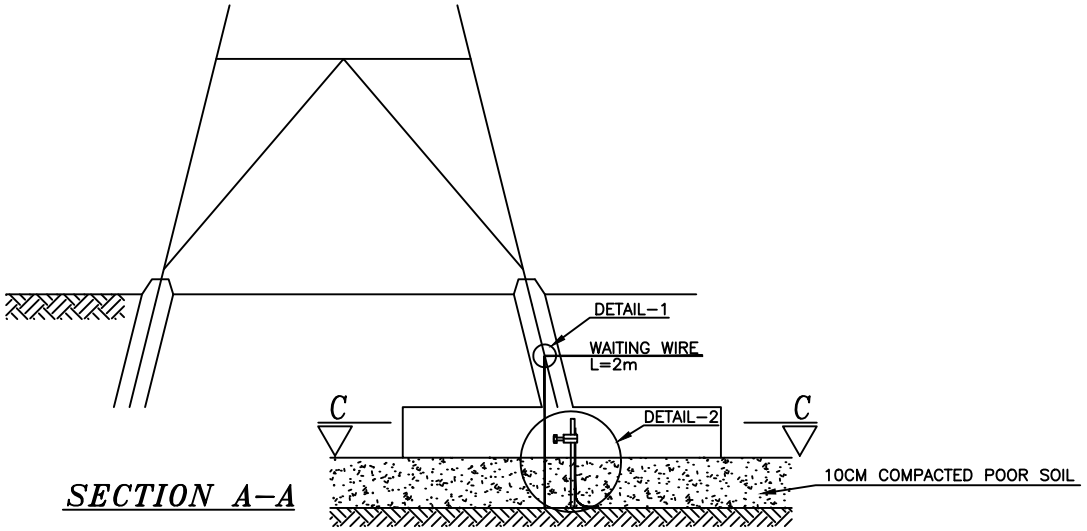

SECTION A–A

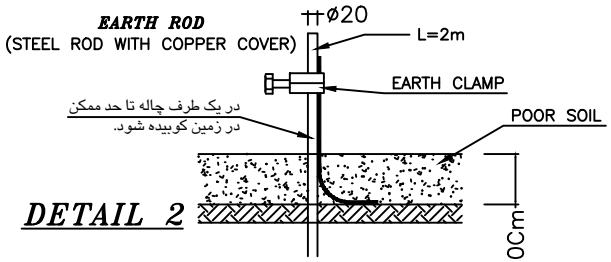

DETAIL 2

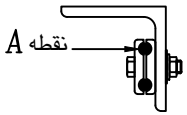

SECTION B–B

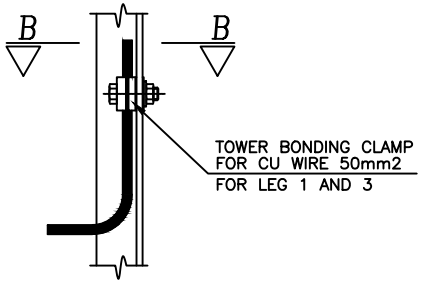

DETAIL 1

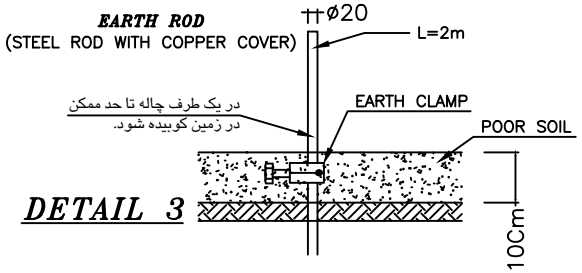

DETAIL 3

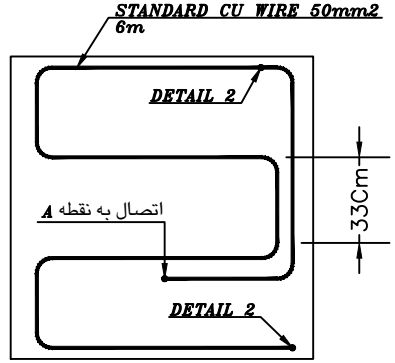

SECTION C–C

REV.	DATE	DESCRIPTION
D		
C		
B		
A		
Z	05/05	ORIGINAL ISSUED.

DATE	Signaturs	
		DESIGN
		DRAWN
		CONTROL
		APPROVE
		FILE NO.

CLIENT:
BIARJEMAND CEMENT COMPANY

CONSULTANT:
PAYA NIROU PAZH CO.

PROJECT:
BIARJMAND CEMENT
CO. 63 Kv T/L

TITLE :
Tower Earting system with two Rods

TENDER NO :
CONTRACT NO :
DWG NO :

SCALE :
UNIT :
SHEET :
NEXT SHEET :

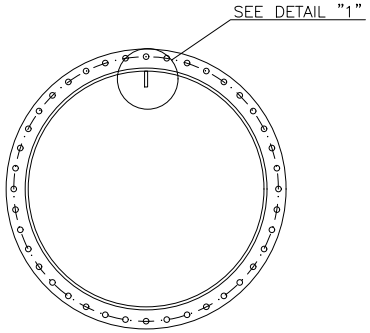

TOWER PLAN

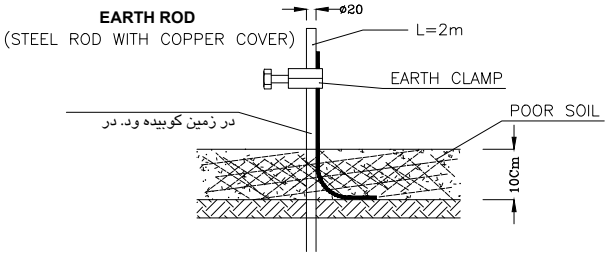

DETAIL 2

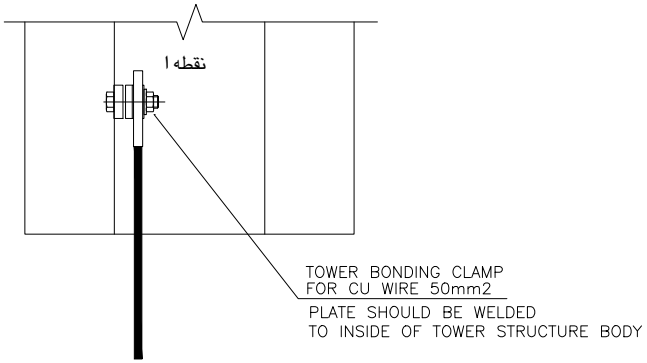

DETAIL 1

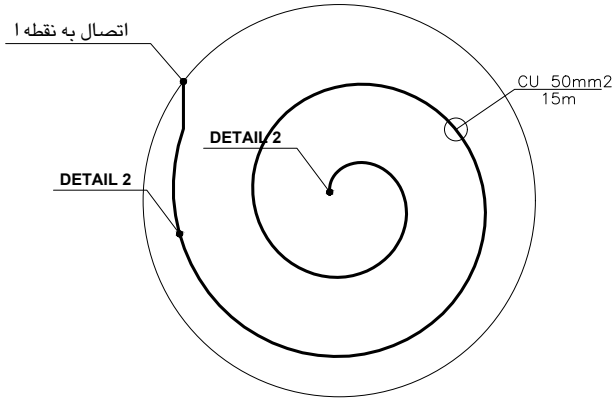

REV.	DATE	DESCRIPTION
D		
C		
B		
A		
Z	05/05	ORIGINAL ISSUED.

	DATE	Signaturs	
			DESIGN
			DRAWN
			CONTROL
			APPROVE
			FILE NO.

CLIENT:
BIARJEMAND CEMENT COMPANY

CONSULTANT:
PAYA NIROU PAZH CO.

PROJECT:
BIARJMAND CEMENT
CO. 63 Kv T/L

TITLE :
Tower Earting system with two Rods 2

TENDER NO :
CONTRACT NO :
DWG NO :

SCALE :
UNIT :
SHEET :
NEXT SHEET :

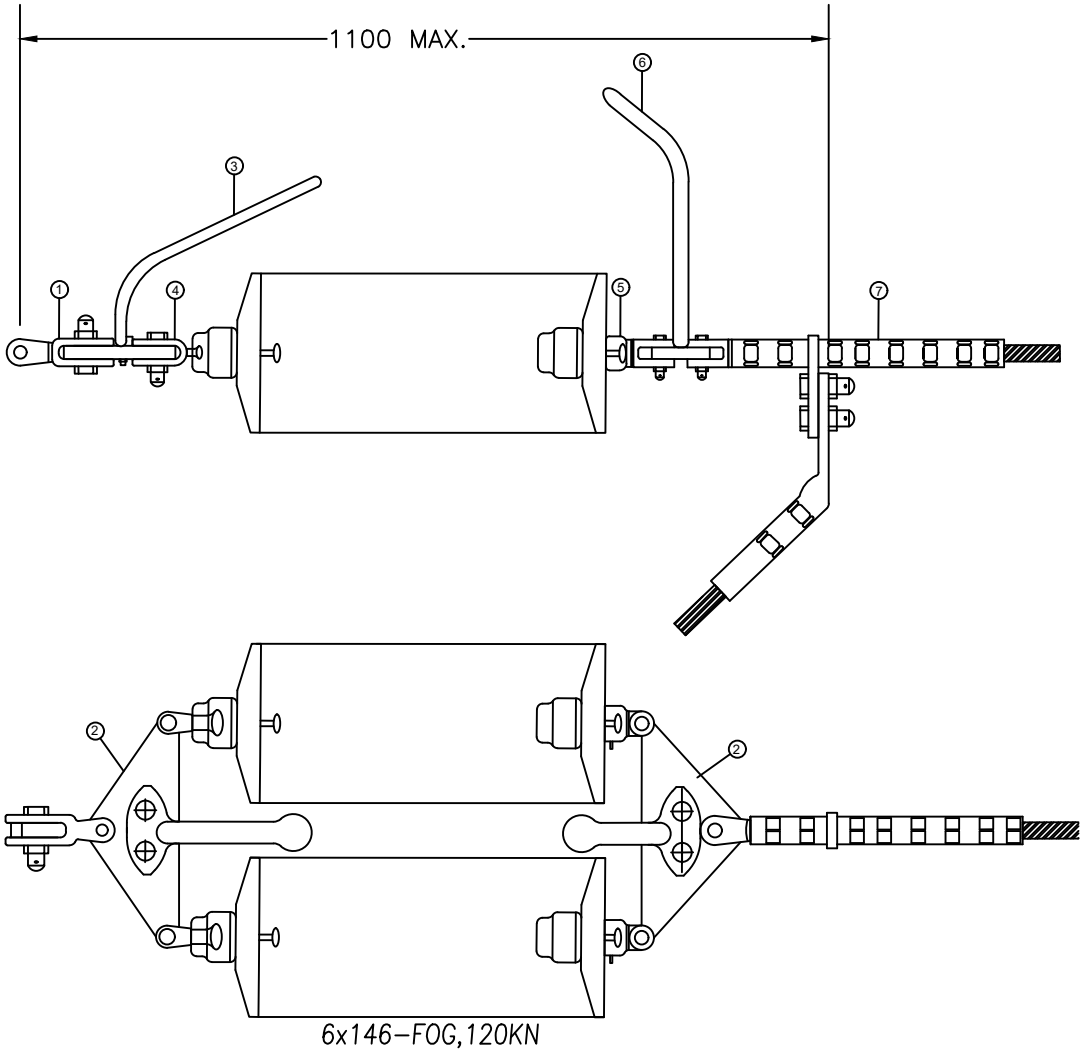

ITEM	DESCRIPTION	PCS.	MATERIAL
1.	DOUBLE CLEVIS 90°	1	
2.	YOKE	2	
3.	EARTH END RACKET	1	
4.	BALL CLEVIS	2	
5.	SOCKET CLEVIS	2	
6.	EARTH END RACKET	1	
7.	COMPRESSION DEAD END CLAMP	1	

* Coupling IEC 120 : 16 mm
* RIV < 60 dB / 1 micro Volt / 500 HZ
* Short Circuit Current : 50 kA / 0.5 Sec
* Breaking Strength : 120 kN

DOUBLE TENSION STRING

With cap and pin insulators
for twin bundle conductor
For AAC, AAAC and ACSR
Minimum breaking strength (without suspension clamp)

120KN, standard coupling 16, IEC 120
For 63 KV Overhead Lines

REV.	DATE	DESCRIPTION
D		
C		
B		
A		
Z	05/05	ORIGINAL ISSUED.

DATE	Signaturs	
		DESIGN
		DRAWN
		CONTROL
		APPROVE
		FILE NO.

CLIENT:
BIARJEMAND CEMENT COMPANY

CONSULTANT:
PAYA NIROU PAZH CO.

PROJECT:
BIARJMAND CEMENT
CO. 63 Kv T/L

TITLE :
63 Kv Double Tension string

TENDER NO :
CONTRACT NO :
DWG NO :

SCALE :
UNIT :
SHEET :
NEXT SHEET :

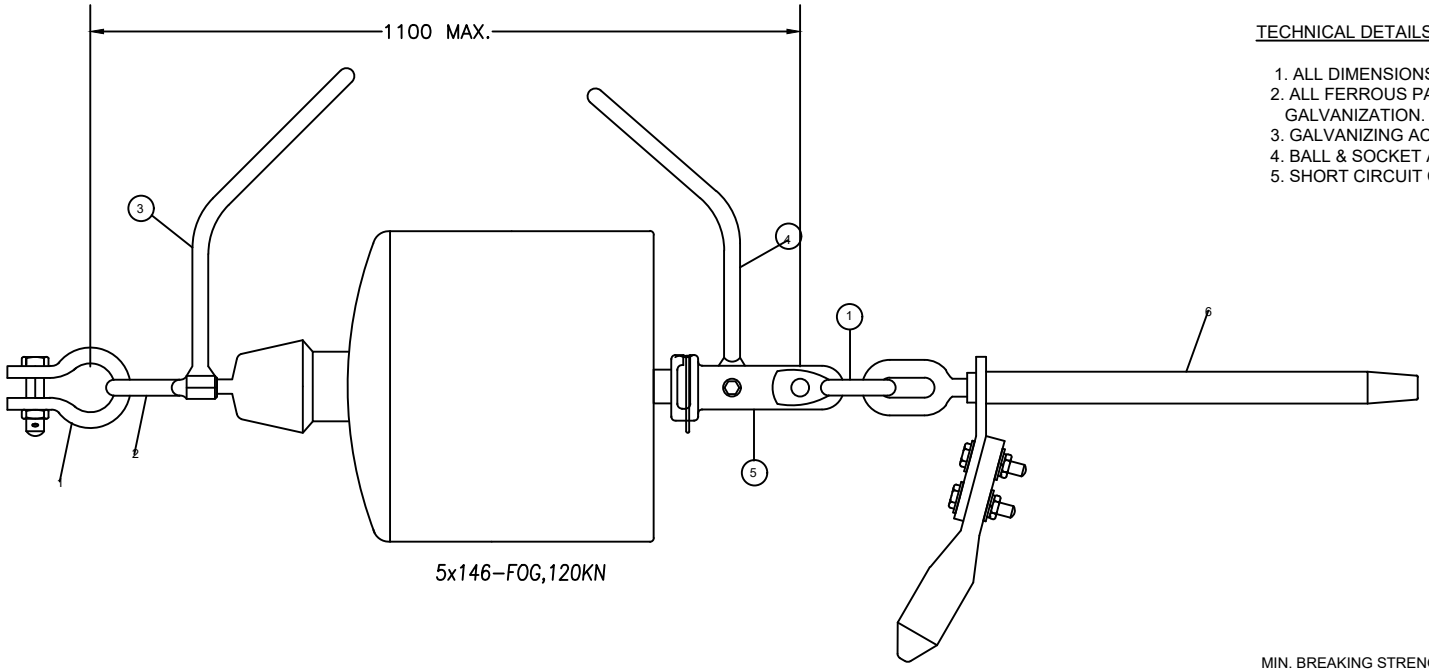

TECHNICAL DETAILS :

1. ALL DIMENSIONS ARE IN mm.
2. ALL FERROUS PARTS MUST HAVE HOT DIP GALVANIZATION.
3. GALVANIZING ACC. TO ASTM A153 OR BS 729.
4. BALL & SOCKET ACC. TO IEC 120 : 16 mm.
5. SHORT CIRCUIT CURRENT : 20 KA 0.5 SEC.

MIN. BREAKING STRENGTH : 120 kN

ITEM	DESCRIPTION	REQD	MATERIAL	SURFACE TREATMENT	U.T.S (Kg)
1		2	FORGED STEEL	HOT DIP GAL.	10000
2	BALL EYE WITH ARCING HORN MOUNT	1	FORGED STEEL	HOT DIP GAL.	10000
3	SINGLE TOWER SIDE ARCING HORN	1	AL. ALLOY OR FORGED STEEL	IN CASE OF STEEL HOT DIP GAL.	- -
4	SINGLE LINE SIDE ARCING HORN	1	AL. ALLOY OR FORGED STEEL	IN CASE OF STEEL HOT DIP GAL.	- -
5	SOCKET EYE WITH HOLE FOR HORN HOLDER	1	FORGED STEEL	HOT DIP GAL.	10000
6	DEAD END CLAMP	1		- -	95% U.T.S OF CONDUCTOR

REV.	DATE	DESCRIPTION
D		
C		
B		
A		
Z	05/05	ORIGINAL ISSUED.

DATE	Signaturs	
		DESIGN
		DRAWN
		CONTROL
		APPROVE
		FILE NO.

CLIENT:
BIARJEMAND CEMENT COMPANY

CONSULTANT:
PAYA NIROU PAZH CO.

PROJECT:
BIARJMAND CEMENT
CO. 63 Kv T/L

TITLE :
63 Kv Tension string

TENDER NO :
CONTRACT NO :
DWG NO :

SCALE :
UNIT :
SHEET :
NEXT SHEET :

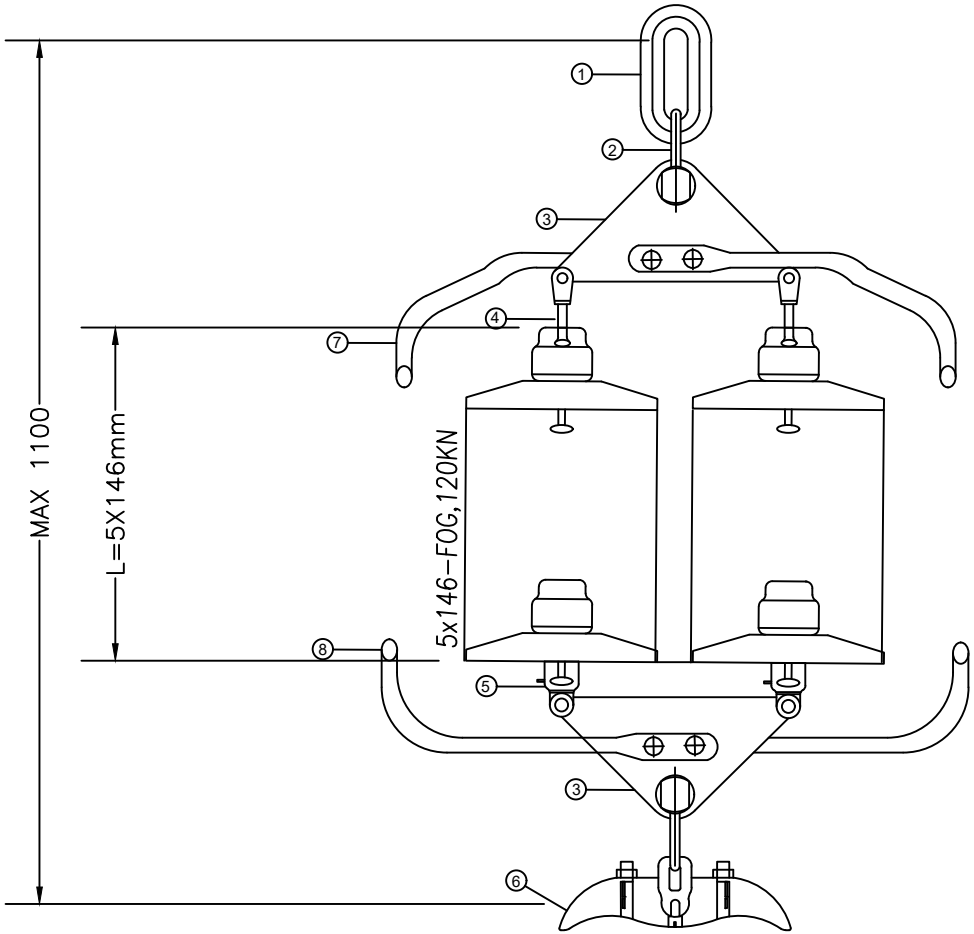

ITEM	DESCRIPTION	PCS.	MATERIAL
1.	EYE	1	
2.	SHACKLE	1	
3.	YOKE	2	
4.	BALL CLEVIS	2	
5.	SOCKET CLEVIS	2	
6.	SUSPENSION CLAMP	1	
7.	EARTH END	2	
8.	LINE END	2	

* Coupling IEC 120 : 16 mm
* RIV < 60 dB / 1 micro Volt / 500 HZ
* Short Circuit Current : 50 kA / 0.5 Sec
* Breaking Strength : 80 kN

DOUBLE SUSPENSION STRING

With cap and pin insulators
for twin bundle conductor
For AAC, AAAC and ACSR
Minimum breaking strength (without suspension clamp)

120KN, standard coupling 16, IEC 120
For 63 KV Overhead Lines

REV.	DATE	DESCRIPTION
D		
C		
B		
A		
Z	05/05	ORIGINAL ISSUED.

DATE	Signaturs	
		DESIGN
		DRAWN
		CONTROL
		APPROVE
		FILE NO.

CLIENT:
BIARJEMAND CEMENT COMPANY

CONSULTANT:
PAYA NIROU PAZH CO.

PROJECT:
BIARJMAND CEMENT
CO. 63 Kv T/L

TITLE :
63 Kv Double Suspension string

TENDER NO :
CONTRACT NO :
DWG NO :

SCALE :
UNIT :
SHEET :
NEXT SHEET :

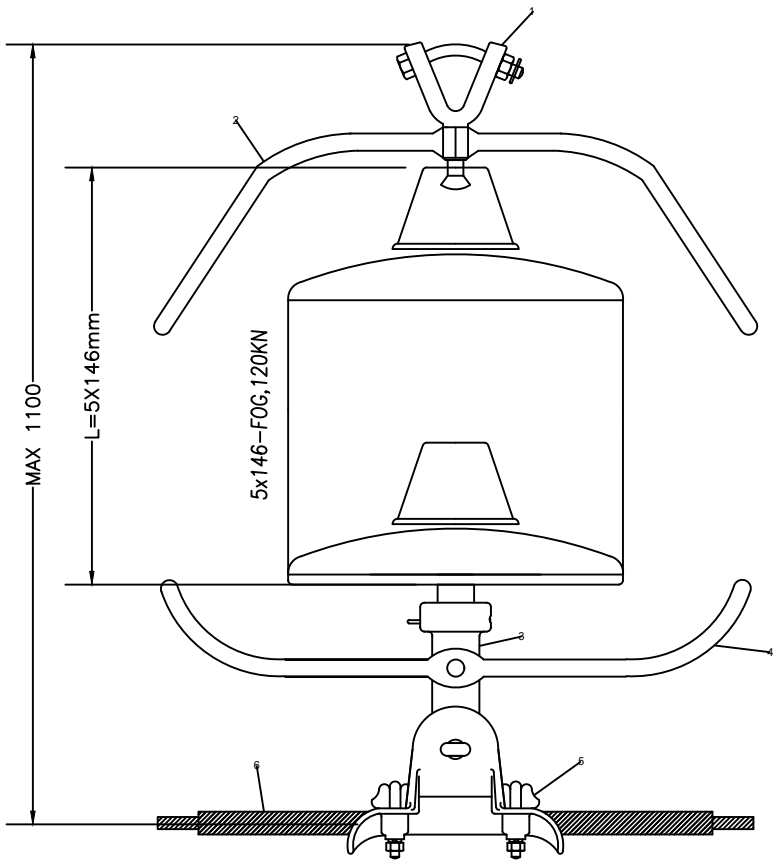

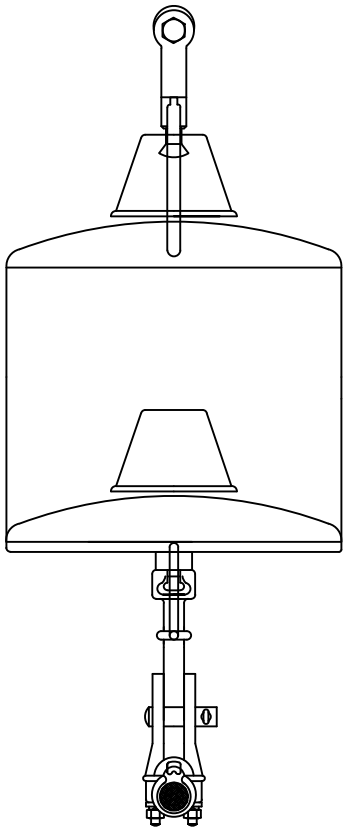

TECHNICAL DETAILS :

1. ALL DIMENSIONS ARE IN mm.
2. ALL FERROUS PARTS MUST HAVE HOT DIP GALVANIZATION.
3. GALVANIZING ACC. TO ASTM A153 OR BS 729.
4. BALL & SOCKET ACC. TO IEC 120 : 16 mm.
5. SHORT CIRCUIT CURRENT : 20 KA 0.5 SEC.

MIN. BREAKING STRENGTH : 80 kN

ITEM	DESCRIPTION	REQD	MATERIAL	SURFACE TREATMENT	U.T.S (Kg)
1	Y BALL CLEVIS WITH ARCING HORN MOUNT	1	FORGED STEEL	HOT DIP GAL.	8000
2	DOUBLE TOWER SIDE ARCING HORN	1	FORGED STEEL	HOT DIP GAL.	- -
3	SOCKET EYE WITH HOLE FOR HORN HOLDER	1	FORGED STEEL	HOT DIP GAL.	7000
4	DOUBLE LINE SIDE ARCING HORN	1	FORGED STEEL	HOT DIP GAL.	- -
5	SUSPENSION CLAMP WITH ARMOR ROD	1	ALUMINUM ALLOY	- -	6000
6	ARMOR ROD	1 SET	HIGH STTENGHT ALUMINUM ALLOY	- -	- -

REV.	DATE	DESCRIPTION
D		
C		
B		
A		
Z	05/05	ORIGINAL ISSUED.

DATE	Signaturs	
		DESIGN
		DRAWN
		CONTROL
		APPROVE
		FILE NO.

CLIENT:
BIARJEMAND CEMENT COMPANY

CONSULTANT:
PAYA NIROU PAZH CO.

PROJECT:
BIARJMAND CEMENT
CO. 63 Kv T/L

TITLE :
63 Kv Suspension string

TENDER NO :
CONTRACT NO :
DWG NO :

SCALE :
UNIT :
SHEET :
NEXT SHEET :

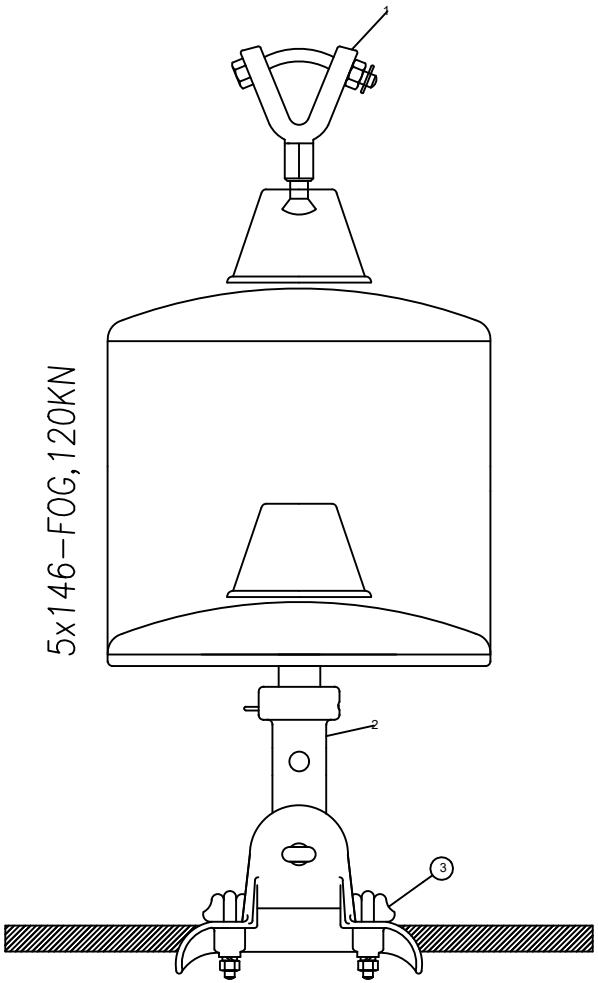

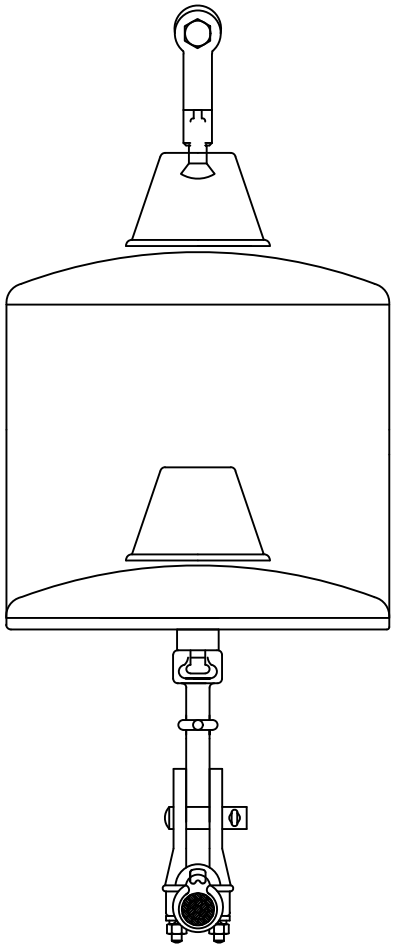

TECHNICAL DETAILS :

1. ALL DIMENSIONS ARE IN mm.
2. ALL FERROUS PARTS MUST HAVE HOT DIP GALVANIZATION.
3. GALVANIZING ACC. TO ASTM A153 OR BS 729.
4. BALL & SOCKET ACC. TO IEC 120 : 16 mm.
5. SHORT CIRCUIT CURRENT : 20 KA 0.5 SEC.

MIN. BREAKING STRENGTH : 7000 KG

ITEM	DESCRIPTION	REQD	MATERIAL	SURFACE TREATMENT	U.T.S (Kg)
1	Y BALL CLEVIS	1	FORGED STEEL	HOT DIP GAL.	8000
2	SOCKET EYE	1	FORGED STEEL	HOT DIP GAL.	7000
3	SUSPENSION CLAMP WITHOUT ARMOR ROD	1	ALUMINUM ALLOY	– –	6000

REV.	DATE	DESCRIPTION
D		
C		
B		
A		
Z	05/05	ORIGINAL ISSUED.

DATE	Signaturs	
		DESIGN
		DRAWN
		CONTROL
		APPROVE
		FILE NO.

CLIENT:
BIARJEMAND CEMENT COMPANY

CONSULTANT:
PAYA NIROU PAZH CO.

PROJECT:
BIARJMAND CEMENT
CO. 63 Kv T/L

TITLE :
63 Kv Jumper string

TENDER NO :
CONTRACT NO :
DWG NO :

SCALE :
UNIT :
SHEET :
NEXT SHEET :

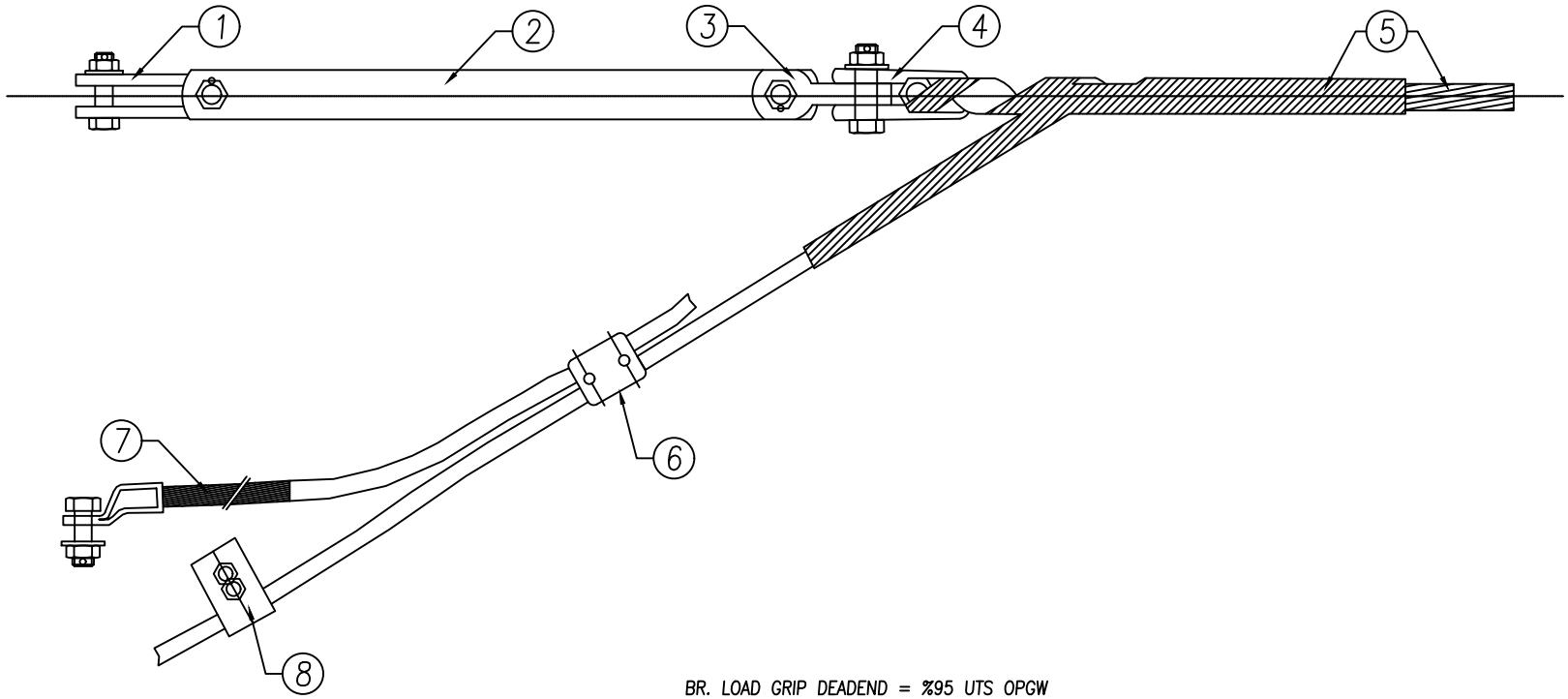

BR. LOAD GRIP DEADEND = %95 UTS OPGW

ITEM	DESCRIPTION	QTY.	BR.LOAD (KN)	MATERIAL	WEIGHT (KG)	COATING
1	SHACKLE	1	120	ST.	–	H.D.G.
2	EXTENSION LINK	1	120	ST.	–	H.D.G.
3	SHACKLE	1	120	ST.	–	H.D.G.
4	THIMBLE CLEVIS	1	70	AL. ALLOY	–	–
5	GRIP DEADEND SET	1	–	AL– CLAD ST.	–	–
6	PARALLEL GROOVE	1	–	AL. ALLOY	–	–
7	EARTHING BOND	1	–	AL. ALLOY	–	–
8	FASTENING CLAMP	1	–	ST.	–	H.D.G.

REV.	DATE	DESCRIPTION
D		
C		
B		
A		
Z	05/05	ORIGINAL ISSUED.

DATE	Signaturs	
		DESIGN
		DRAWN
		CONTROL
		APPROVE
		FILE NO.

CLIENT:
BIARJEMAND CEMENT COMPANY

CONSULTANT:
PAYA NIROU PAZH CO.

PROJECT:
BIARJMAND CEMENT
CO. 63 Kv T/L

TITLE :
OPGW Suspension set

TENDER NO :
CONTRACT NO :
DWG NO :

SCALE :
UNIT :
SHEET :
NEXT SHEET :

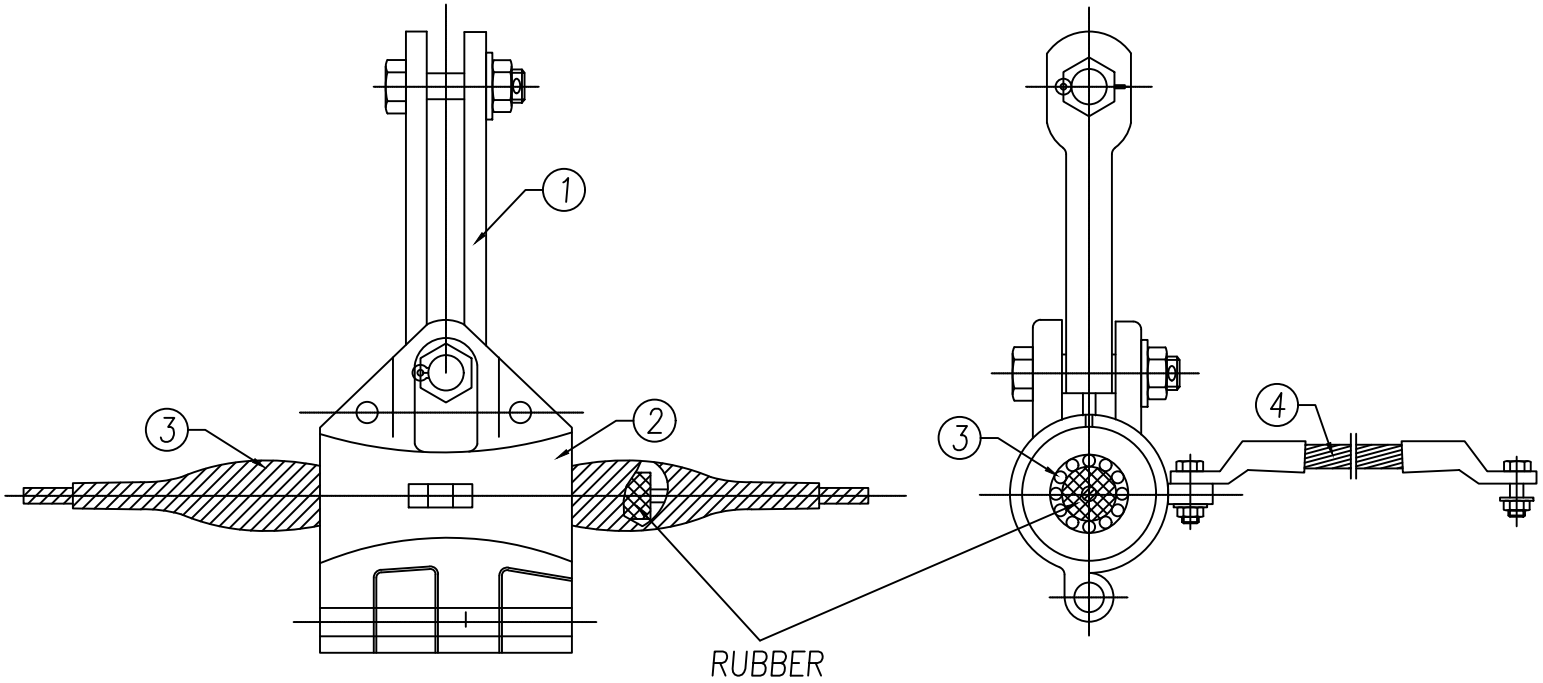

* Breaking Strength : 80 kN

ITEM	DESCRIPTION	QTY.	BR.LOAD (KN)	MATERIAL	WEIGHT (KG)	COATING
1	SHACKLE	1	120	ST.	–	H.D.G.
2	SUSPENSION CLAMP	1	50	AL. ALLOY	–	–
3	ARMOR ROD	1	–	AL. ALLOY	–	–
4	EARTHING BOND	1	–	AL. ALLOY	–	–

REV.	DATE	DESCRIPTION
D		
C		
B		
A		
Z	05/05	ORIGINAL ISSUED.

DATE	Signaturs	
		DESIGN
		DRAWN
		CONTROL
		APPROVE
		FILE NO.

CLIENT:
BIARJEMAND CEMENT COMPANY

CONSULTANT:
PAYA NIROU PAZH CO.

PROJECT:
BIARJMAND CEMENT
CO. 63 Kv T/L

TITLE :
OPGW Tension set

TENDER NO :
CONTRACT NO :
DWG NO :

SCALE :
UNIT :
SHEET :
NEXT SHEET :

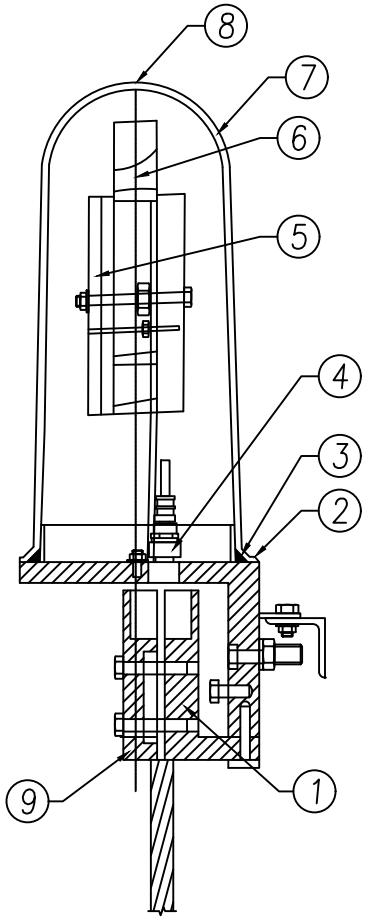

ITEM	DESCRIPTION	QTY.	DWG.NO.	MATERIAL	WEIGHT (KG)	COATING
1	CABLE CLAMP (PART 1)	1	–	AL. ALLOY	–	–
2	HOUSING BASE PLATE	1	–	AL. ALLOY	–	–
3	SEALING RING	1	–	PLASTIC	–	–
4	PG–SCREWING	1	–	STAIN.ST.	–	–
5	SPLICE TRAYS	1	–	PLASTIC	–	–
6	STORAGE DEVICE	1	–	STAIN.ST.	–	–
7	HOOD	1	–	AL. ALLOY	–	–
8	CLAMPING BAND	1	–	STAIN.ST.	–	–
9	CABLE CLAMP (PART 2)	1	–	AL. ALLOY	–	

REV.	DATE	DESCRIPTION
D		
C		
B		
A		
Z	05/05	ORIGINAL ISSUED.

DATE	Signaturs	
		DESIGN
		DRAWN
		CONTROL
		APPROVE
		FILE NO.

CLIENT:
BIARJEMAND CEMENT COMPANY

CONSULTANT:
PAYA NIROU PAZH CO.

PROJECT:
BIARJMAND CEMENT
CO. 63 Kv T/L

TITLE :
OPGW Joint Box

TENDER NO :
CONTRACT NO :
DWG NO :

SCALE :
UNIT :
SHEET :
NEXT SHEET :

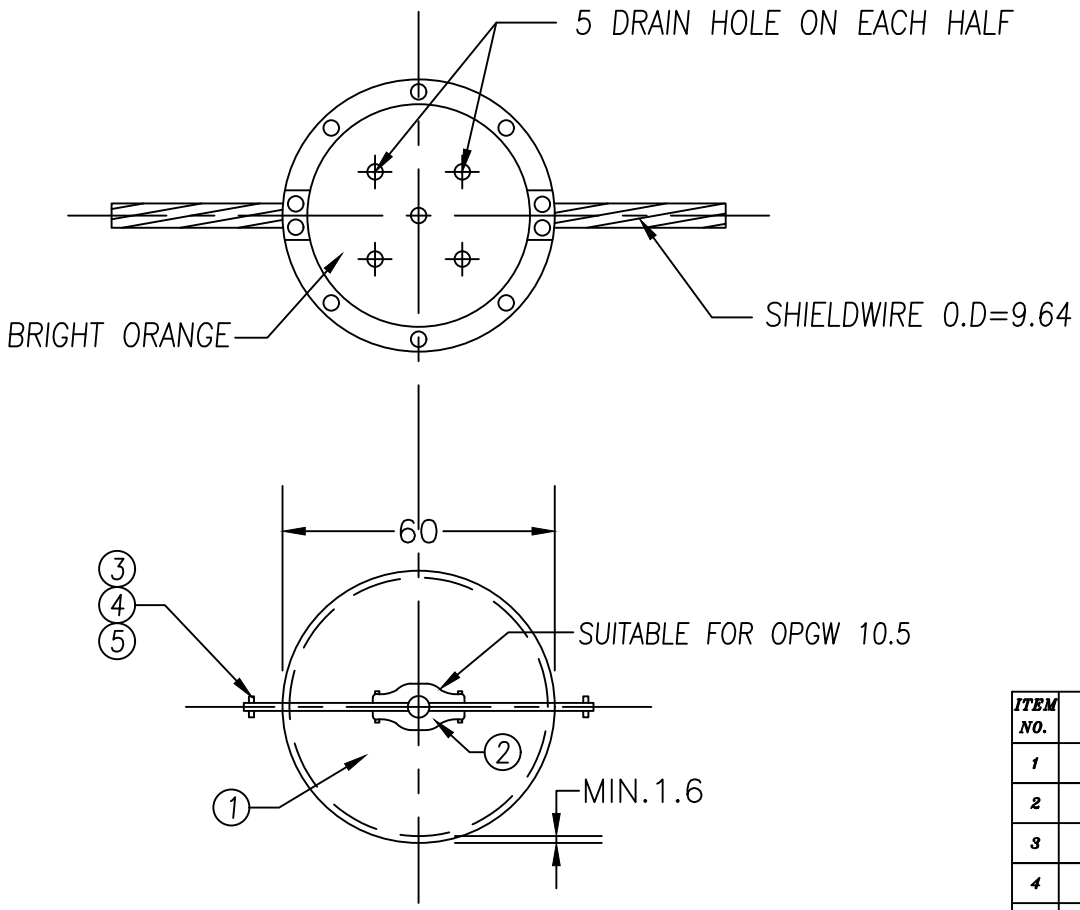

ITEM NO.	DESCRIPTION	REQ. NO.	MATERIAL
1	BALL BODY	2	FIBER GLASS
2	CLAMP	4	AL.ALLOY
3	M12 BOLT & NUT	10	STAINLESS STEEL
4	PLAIN WASHER	20	STAINLESS STEEL
5	SPRING WASHER	10	STAINLESS STEEL

NOTE:

ALL FERROUSE PARTS ARE H.D.G

REV.	DATE	DESCRIPTION
D		
C		
B		
A		
Z	05/05	ORIGINAL ISSUED.

DATE	Signaturs	
		DESIGN
		DRAWN
		CONTROL
		APPROVE
		FILE NO.

CLIENT:

BIARJEMAND CEMENT COMPANY

CONSULTANT:

PAYA NIROU PAZH CO.

PROJECT:

BIARJMAND CEMENT

CO. 63 Kv T/L

TITLE :

Aircraft warning ball

TENDER NO :

CONTRACT NO :

DWG NO :

SCALE :

UNIT :

SHEET :

NEXT SHEET :

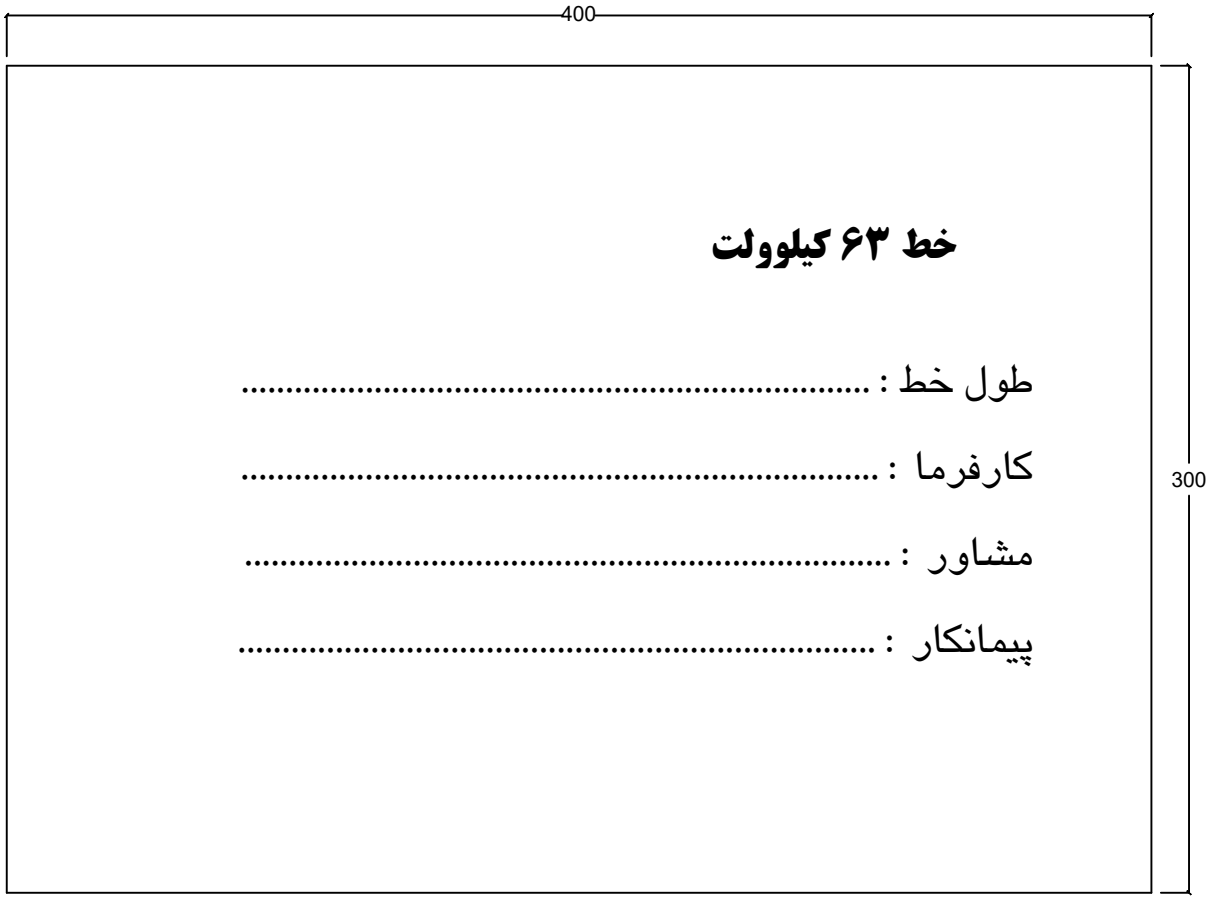

خط ۶۳ کیلوولت

طول خط : .....

کارفرما : .....

مشاور : .....

پیمانکار : .....

۱- زمینه تابلو به رنگ زرد و نوشته های روی آن با رنگ سیاه مشخص شود و رنگ استفاده شده در دو طرف تابلو از نوع کوره ای باشد.

۲- تابلوی فوق به ضخامت ۲ میلیمتر روی ترمینال تاورها در ابتدا و انتهای هر خط نصب می شود.

REV.	DATE	DESCRIPTION
D		
C		
B		
A		
Z	05/05	ORIGINAL ISSUED.

	DATE	Signaturs	
DESIGN			
DRAWN			
CONTROL			
APPROVE			
FILE NO.			

CLIENT:
BIARJEMAND CEMENT COMPANY

CONSULTANT:
PAYA NIROU PAZH CO.

PROJECT:
BIARJMAND CEMENT
CO. 63 Kv T/L

TITLE :
Properties Tableu

TENDER NO :
CONTRACT NO :
DWG NO :

SCALE :
UNIT :
SHEET :
NEXT SHEET :

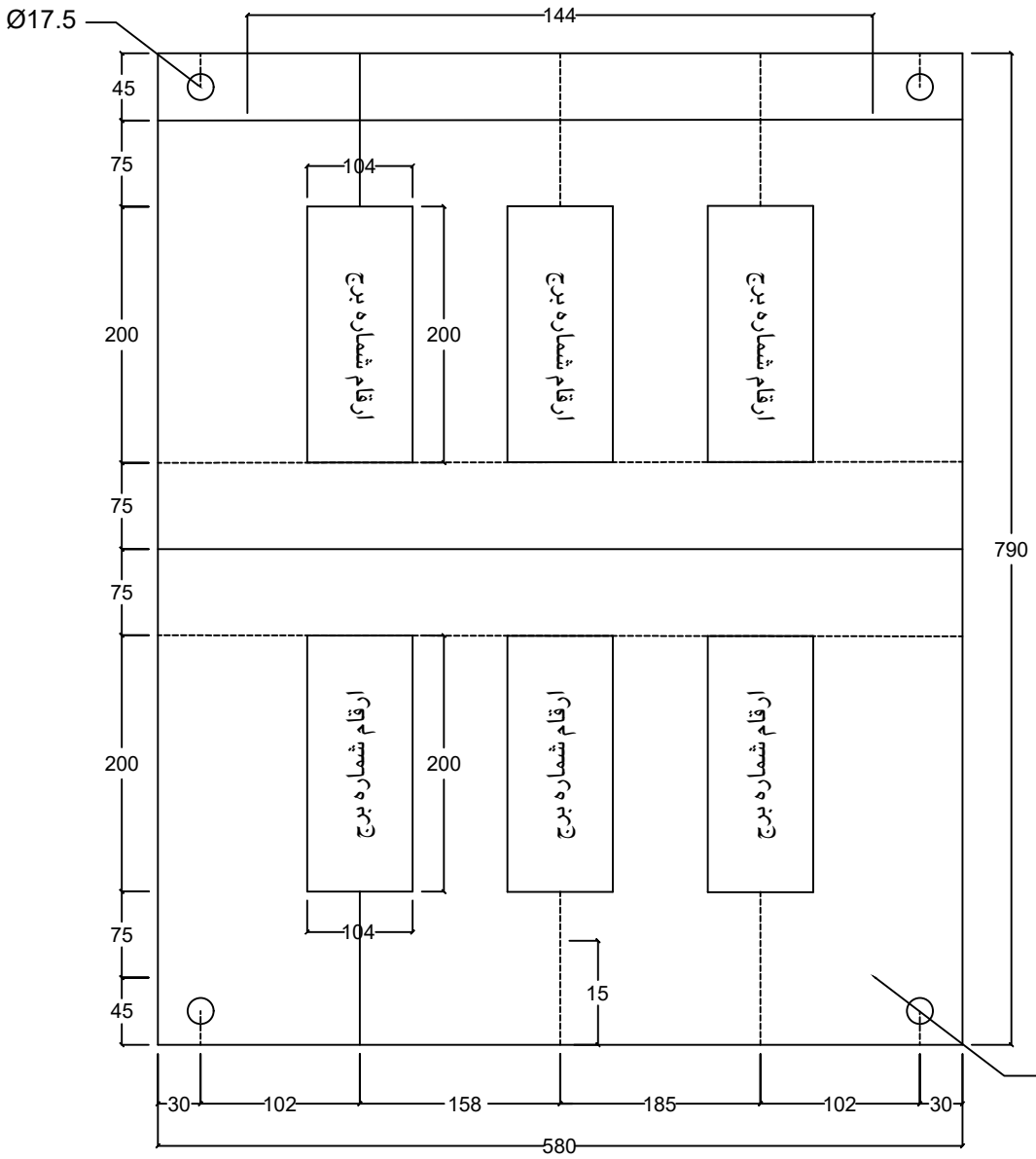

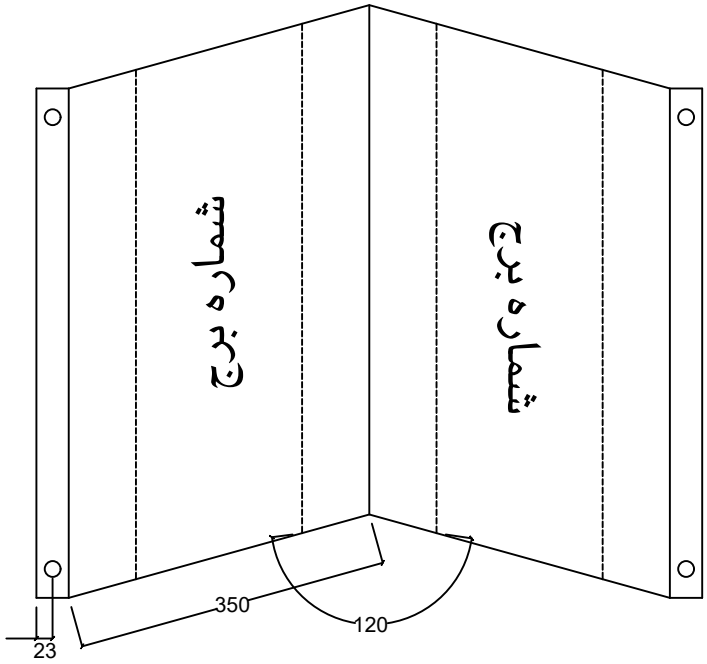

۱- زمینه اصلی تابلو با رنگ زرد و نوشته های آن با رنگ سیاه مشخص شود.

۲- ضخامت ورق ۲ میلیمتر می باشد.

۳- تابلو هوایی شماره برج برای برجهایی که رقم یکان آنها عدد صفر "۰" می باشد به ازای هر ۱۰ دستگاه برج نصب شود.

REV.	DATE	DESCRIPTION
D		
C		
B		
A		
Z	05/05	ORIGINAL ISSUED.

	DATE	Signaturs	
			DESIGN
			DRAWN
			CONTROL
			APPROVE
			FILE NO.

CLIENT:
BIARJEMAND CEMENT COMPANY

CONSULTANT:
PAYA NIROU PAZH CO.

PROJECT:
BIARJMAND CEMENT
CO. 63 Kv T/L

TITLE :
Air High elevation Tableu

TENDER NO :
CONTRACT NO :
DWG NO :

SCALE :
UNIT :
SHEET :
NEXT SHEET :



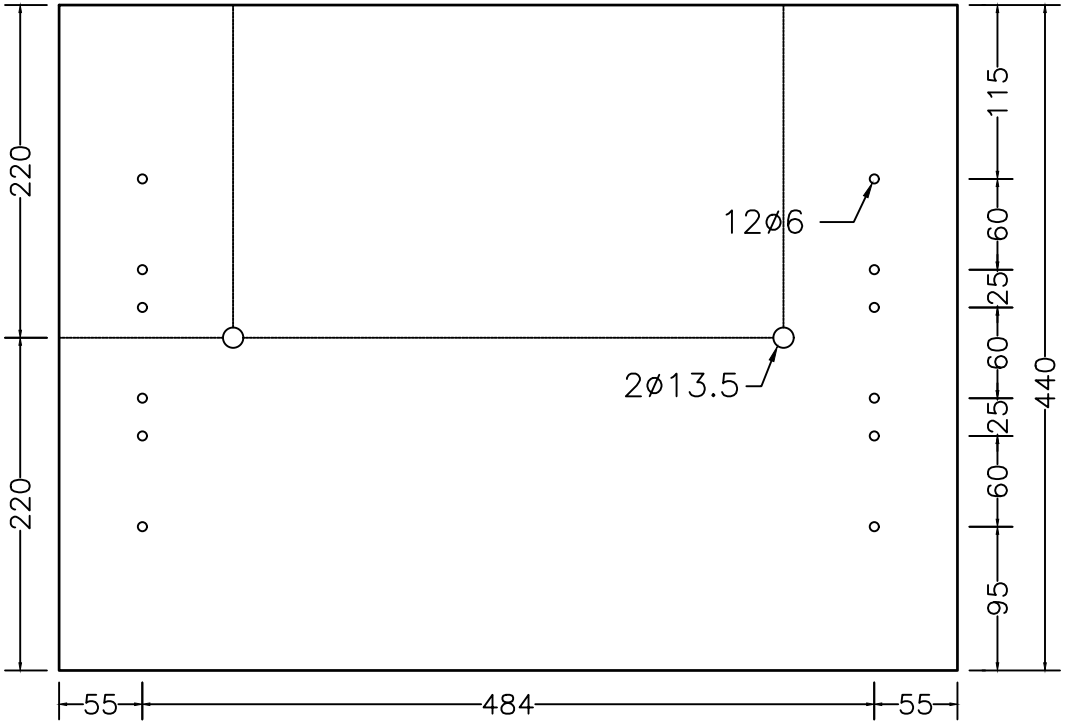

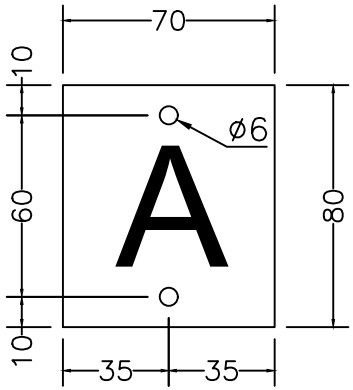

۱- زمینه تابلو به رنگ قرمز و نوشته های روی آن با رنگ سیاه مشخص شود و رنگ استفاده شده در دو طرف تابلو از نوع کوره ای باشد.

۲- شماره برج برای کلیه برجها با رنگ قرمز روی زمینه سفید مشخص شود.

۳- شماره برج و نام خط روی برجهایی که رقم یکان آنها عدد یک "۱" می باشد برای هر ۱۰دستگاه برج با رنگ قرمز روی زمینه سفید مشخص شود.

۴- علامت خطر با رنگ سفید مشخص گردد.

۵- ضخامت ورق ۲ میلیمتر می باشد.

۶- رنگ تابلوهای نشانگر فاز برای فازA قرمز ، برای فازB زرد و برای فاز C آبی باشد . متن فازها نیز با رنگ سیاه نوشته شود.

REV.	DATE	DESCRIPTION
D		
C		
B		
A		
Z	05/05	ORIGINAL ISSUED.

	DATE	Signaturs
DESIGN		
DRAWN		
CONTROL		
APPROVE		
FILE NO.		

CLIENT:
BIARJEMAND CEMENT COMPANY

CONSULTANT:
PAYA NIROU PAZH CO.

PROJECT:
BIARJMAND CEMENT
CO. 63 Kv T/L

TITLE :
Danger Tableu

TENDER NO :
CONTRACT NO :
DWG NO :

SCALE :
UNIT :
SHEET :
NEXT SHEET :

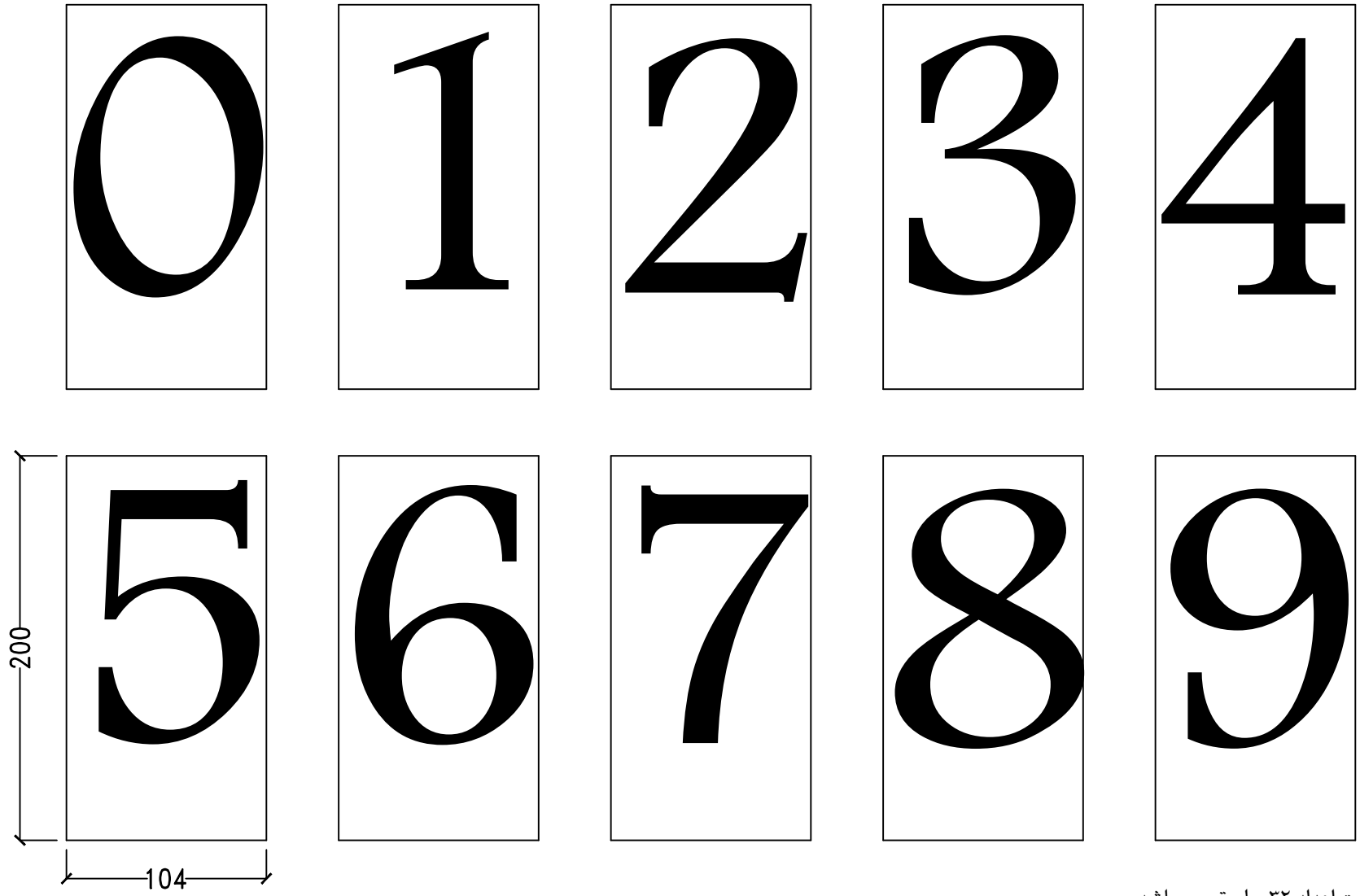

۱- ضخامت اعداد ۳۲ میلیمتر می باشد.

D			DATE	Signaturs		CLIENT: BIARJEMAND CEMENT COMPANY	CONSULTANT: PAYA NIROU PAZH CO.	PROJECT: BIARJMAND CEMENT CO. 63 Kv T/L	TITLE : Number Dimension
C					DESIGN				SCALE :
B					DRAWN				UNIT :
A					CONTROL				SHEET :
Z	05/05	ORIGINAL ISSUED.			APPROVE				TENDER NO :
REV.	DATE	DESCRIPTION			FILE NO.				CONTRACT NO : / DWG NO : / NEXT SHEET :

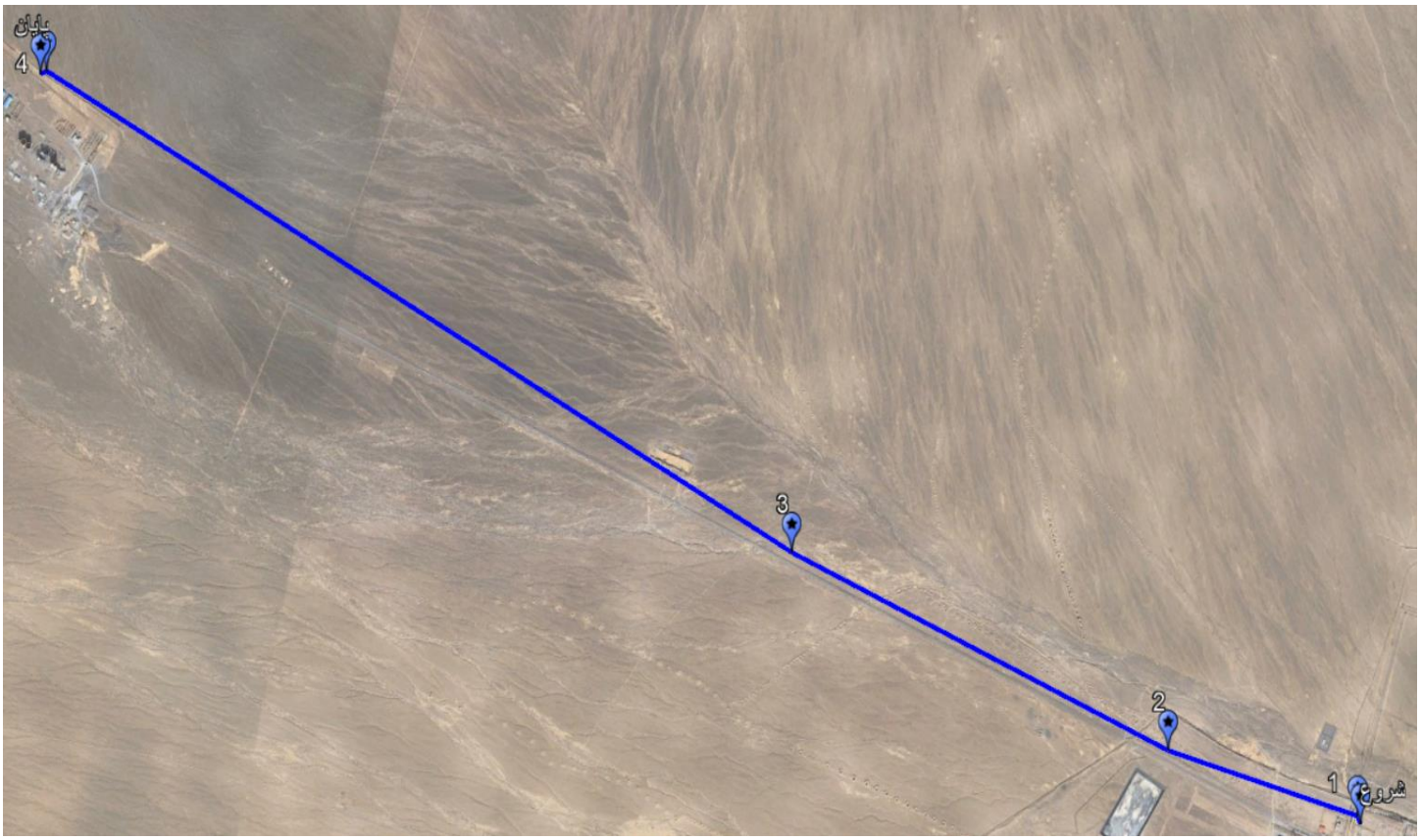

مسیر خط پست ۶۳ کیلوولت بیارجمند – کارحانه سیمان بیارجمند

مختصات مسیر خط پست ۶۳ کیلوولت بیارجمند – کارحانه سیمان بیارجمند

شماره	عرض جغرافیایی(درجه)	طول جغرافیایی (درجه)	طول جغرافیایی (UTM)	عرض جغرافیایی (UTM)	ارتفاع
شروع	36.08267	55.79676	391665.6	3993788	1107.8
1	36.08299	55.7965	391642.7	3993824	1108
2	36.08376	55.78474	390584.7	3993922	1122.5
3	36.08806	55.76061	388418.6	3994427	1156.8
4	36.10025	55.71182	384043.1	3995836	1276.4
پایان	36.10007	55.7115	384014.1	3995816	1276.9

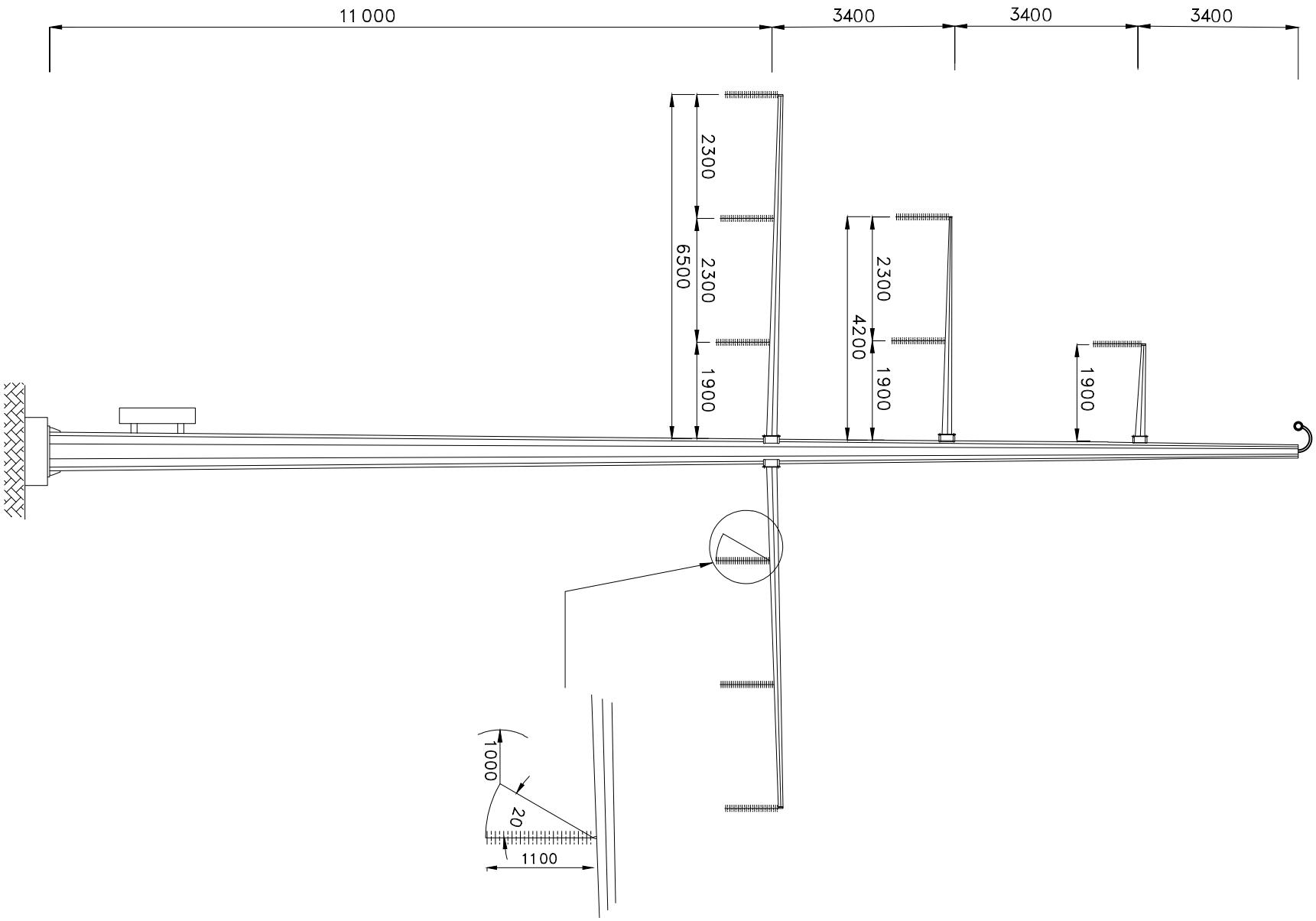

REV.	DATE	DESCRIPTION
D		
C		
B		
A		
Z	05/05	ORIGINAL ISSUED.

DATE	Signaturs	
		DESIGN
		DRAWN
		CONTROL
		APPROVE
		FILE NO.

CLIENT:

BIARJEMAND CEMENT COMPANY

CONSULTANT:

PAYA NIROU PAZH CO.

PROJECT:

BIARJMAND CEMENT

CO. 63 Kv T/L

TITLE :

Tower Single Line Telescopic

TENDER NO :

CONTRACT NO :

DWG NO :

SCALE :

UNIT :

SHEET :

NEXT SHEET :

نیروهای وارده بر برج انتهایی تلسکوپی - هادی Lynx							
	شماره حالت	نام حالت	نیروی قائم min (Kg)	نیروی قائم max (Kg)	نیروی افقی (Kg)	نیروی طولی (Kg)	برآیند نیروها (Kg)
نیروهای متعادل	1	باد شدید	337	152	2641	0	2645
	2	یخ سنگین	582	70	2419	0	2420
	3	یخ و باد متوسط	579	167	4580	0	4583
نیروهای نامتعادل	4	پارگی سیم در حالت باد شدید	295	166	1361	2164	2562
	5	پارگی سیم در حالت یخ سنگین	467	108	1252	2199	2533
	6	یخ در یک طرف اسپن در حالت باد و یخ	381	137	2149	796	2296
	7	سیم کشی و تعمیرات	253	-84	0	0	84

نیروهای وارده بر برج-OPGW در برج تلسکوپی						
	شماره حالت	نام حالت	نیروی قائم (Kg)	نیروی افقی (Kg)	نیروی طولی (Kg)	برآیند نیروها (Kg)
نیروهای متعادل	1	باد شدید	66	1859	0	1860
	2	یخ سنگین	247	2454	0	2466
	3	یخ و باد متوسط	169	3858	0	3862
نیروهای نامتعادل	4	پارگی سیم در حالت باد شدید	33	918	1547	1799
	5	پارگی سیم در حالت یخ سنگین	123	1270	2231	2570
	6	یخ در یک طرف اسپن در حالت باد و یخ	95	1327	2115	2499
	7	سیم کشی و تعمیرات	119	0	0	119